donati

CLEVER CONVENIENCE

MANUAL AND ELECTRIC JIB CRANES

GBA/GBP Series
CBB/MBB Series
CBE/MBE Series
GBR/GBL Series



CLEVER CONVENIENCE

Last update:
November 2026

JIB CRANES



The most complete range for local handling of loads up to 10,000 kg.

The result of in-depth knowledge of the most wide ranging applications, Donati jib cranes offer the most complete range of solutions for local handling of loads up to 10,000 kg.
Mass production performed with consolidated industrialised processes makes it possible to create completely reliable and technically innovative cranes with an excellent price/performance ratio. The quality of the components used, and the excellent finishing of the metal structural work, as well as the EN ISO 9001 certified quality system allows us to offer a top quality product and always in line with the most modern international standards. Donati's expertise in designing and manufacturing jib cranes and wire rope and chain hoists, ensures perfect component integration, as well as always satisfying both standardised and special installation requests.



MAX

10,000 KG

The complete range for local handling solutions







CONCEPT CONSTRUCTION AND THE RANGE

Jib cranes, with manual or electric rotation in column or wall versions, are created to locally handle goods inside a plant, on a square or along with operating stations. Studied and designed also for use in difficult environmental conditions, jib cranes become full operating machines if used and integrated into production centres, machine tools or work benches. They adopt standardised parts which make it possible to create completely standardised configurations.

Jib cranes perform three operations:

- they vertically lift the load in space, using the hook of the lifting unit, generally composed of a DMK chain hoist or DRH wire rope hoist;
- they move the load transversally in space, with the use of a hoist-carrying trolley, either electric or manual, which moves along the radial axis of the crane arm (with the exception of cranes with articulated arm where the hoist normally does not move on the trolley since it is connected in a fixed position at the end of the arm);
- they rotate the load in space, around the constrained axis of the arm, through a manual push action of the load or electrically by means of a gear motor, serving the circular area below, limited by the rotation radius of the arm.

Jib cranes are mass produced for capacities starting from 63 to 10,000 kg and jibs from 2 to 10.5 m in the following executions:

- Jib cranes with manual rotation, max. capacity 2,000 kg
  - GBA SERIES column-mounted, 300° rotation
  - GBP SERIES wall-mounted, 270° rotation
- Jib cranes with articulated arm, max. capacity 500 kg
  - CBB SERIES column-mounted, 360° manual rotation
  - MBB SERIES wall-mounted, 360° manual rotation
- Jib cranes with motorised arm, max. capacity 2,000 kg
  - CBE SERIES column-mounted, 300° electric rotation
  - MBE SERIES wall-mounted, 270° electric rotation
- Jib cranes with continuous electric rotation, max. capacity 10,000 kg
  - GBR SERIES column-mounted, 360° electric rotation
- Jib cranes with continuous electric rotation, max. capacity 5,000 kg and max. manual capacity 2,000 kg
  - GBL SERIES column-mounted, 360° continuous rotation

CONSTRUCTION CHARACTERISTICS

MODULAR COMPONENTS

Thanks to the modular components all Donati jib cranes are tailor-made for customer needs in a fast and efficient
way - as standardised as well as special configurations. Basic versions are always available in the warehouse. Because of their extreme compactness the base components, columns, brackets and arms, enable the maximum use of the hook run and, thanks to their minimum lateral headroom, allow the optimal use in the operating area.

COLUMN

The column jib crane consists of a supporting column, made of press forged steel with a tubular structure with a polygonal section. This allows a high rigidity and stability of the crane and is fixed to the base with a base plate and a system of bolts and lug bolts. In the upper part a pair of plates support the arm and allow it to rotate.

SUPPORT BRACKET

The wall-mounted jib crane consists of a bracket support structure. This is formed by a pair of plates made of press-forged steel, fixed to the wall or anchored to a pillar with staybolts or screws which act as a support to the arm and allow it to rotate.

ROTATING ARM

The arm, rotating around its own axis, consists of a supporting girder for the run of the hoist-carrying trolley. Depending on the model it can be made in profile or channel version designed by Donati.

BRAKING DEVICE OF THE ARM

The arm of the manually rotated jib crane is fitted in all models with a braking system. The brake, the clutch with asbestos-free friction material, allows the regulation of the force of rotation of the arm and ensures the stability of positioning.

FIXING SYSTEMS OF THE CRANE

- Foundation frame with lug bolts. The jib cranes are generally designed to be fixed to the ground using the foundation frame with lug bolts inserted in the foundation plinth.
- Chemical bolts. The fixing of the column to the floor can be done using chemical bolts, also with a counterplate where necessary which allows better distribution of forces.
- Brackets and staybolts unit. This is used for fixing the bracket jib crane to a supporting pillar and is fitted with a pressure screw system which guarantees a better adhesion of the staybolts to the pillar.

DONATI LIFTING EQUIPMENT

Safe, versatile DMK electric chain hoists are used and for higher loads the DRH electric wire rope hoists (installed only on GBR and GBL series cranes) with 1 or 2 lifting and moving speeds.

HEIGHT OF COLUMNS AND LENGTH OF ARMS

The range of the jib cranes is characterised by a vast availability of standard models and made-to-measure in special models. All the cranes with a column of "base" height and also in half-metre variation, the cranes up to a top height of two metres as shown in the following table are standard models:

"STANDARD" HEIGHT OF THE COLUMNS (m)							
SERIES	CRANE HEIGHT	DIMENSION	"BASE" HEIGHT	OTHER "STANDARD" HEIGHTS			
GBA CBB-CBE	R-S	H	3	3.5	4	4.5	5
	T-U	H	3.5	4	4.5	5	5.5
	V-Z	H	4	4.5	5	5.5	6
GBR	2-3-4-5-6	H	4	4.5	5	5.5	6
GBL	2-3	H	3,5	4	-	-	-
	5	H	4	4.5	-	-	-

All the cranes with columns of heights different from the standard ones with "made to measure" heights are made in special execution or exceeding two metres or of a lower height with respect to the "base" column. There are also special cranes with arms lengths other than the standard ones in the technical tables.

FINISHING

Protection from atmospheric agents (dust, etc.) is guaranteed by a painting treatment that includes the application of a coat of yellow two component acrylic polyurethane enamel with a 50 micron thickness, after preparation of the surfaces with metallic sandblasting with SA2 grade. Drying in an oven for 15 minutes at a temperature of 45/50°C concludes the cycle.

SERVICE CLASS

The structural elements of the manually or electrically rotated, column-mounted or wall-mounted, jib cranes are dimensioned in the class of service ISO A5 (according to ISO 4301-1/88).

PROTECTION AND INSULATION OF ELECTRICAL PARTS

- Rotation motor: Protection IP54 (motors) IP23 (brakes); insulation class "F" (where necessary)
- Electrical panel: Minimum protection IP55 - Maximum voltage insulation 1500V (where necessary)
- Push-button panel: Protection IP65 - Maximum voltage insulation 500V (where necessary)
- Collector ring: Protection IP65 - Maximum voltage insulation 600V (where necessary)
- Rotation limit switch: Protection IP65 - Maximum voltage insulation 500V (where necessary)
- Connector blocks: Minimum protection IP65 - Maximum voltage insulation 1500V
- Cables: CEI 20/22 - Maximum power insulation 450/750V.

ELECTRIC POWER SUPPLY

The electrical jib cranes are designed to be powered with alternate electric power three-phase of: 400V according to IEC38-1. The CBE series "column" and MBE "wall" electrically rotated jib cranes must be powered with alternate electrical power with three-phase power + neutral + earth (~ 3 + N + T).

ENVIRONMENTAL CONDITIONS OF USE

Use temperatures: minimum - 10° C; maximum + 40°C Maximum relative humidity: 80% - Maximum altitude 1000 m above sea level. The standard crane must be installed in a ventilated environment, free from corrosive vapours (acid vapours, saline clouds, etc) and is designed for use in an indoor area (protected from bad weather). Special executions for outdoor service are available on request.

NOISE

The level of acoustic pressure emitted by the hoist is always lower than 85 dB (A). The incidence of environmental characteristics such as transmission of sound by metallic structures, reflection caused by combined machines and walls, is not included in the figure shown.

Rotation stops for arms on GBA and GBP

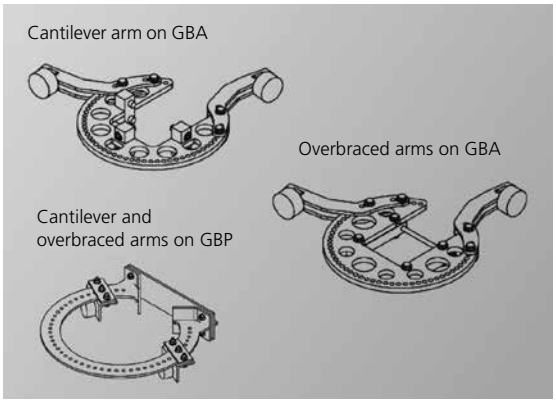

SPECIAL VERSIONS

On request the following can be supplied for jib cranes:

- Designs for outdoor service with wind speeds of up to 70 km/h (above this limit, a specific assessment by our technical service department must be carried out)
- Special anticorrosive paint.
- Protection cover for motors and control panel (GBR series).
- Hoist-trolley protection cover in standby position (GBA/GBP - CBE/MBE series).
- Gear protection guard (CBE/MBE series).
- Rotation motor with stainless steel brake blocks and / or tropicalisation (for electrically rotated cranes).
- Anti-condensation heaters.
- Rotation stops (GBA/GBP series).
- Supplementary electrical safety limit switches (for electrically rotated cranes).
- Power supply voltages different from the standard ones (for electrically rotated cranes).
- Columns with double opposite and parallel arms (GBA series).
- Customised column heights and arm lengths.
- Galvanised treatment for GBA/GBP series cranes with T and H version arm.

MANUALLY ROTATED JIB CRANES

GBA “COLUMN” SERIES

MAXIMUM ROTATION FIELD 300°
(290° IN THE T VERSION)

GBP “WALL” SERIES

MAXIMUM ROTATION FIELD 270°
(250° IN THE T VERSION)





THE MANUALLY ROTATED JIB CRANES IN THE GBA "COLUMN" SERIES AND THE GBP "WALL" SERIES

are designed for the handling of goods inside a plant, in a square or to serve operative purposes. The standard models are available for lifting capacities from 63 to 2,000 kg and jibs from 2 to 8 m. The S-T-H- versions are designed according to the three different versions of the arm.

"T" CANTILEVER VERSION FOR LIFTING CAPACITIES FROM 63 kg TO 2,000 kg AND JIBS FROM 2 TO 5 m

The arm is made using a laminated double T-beam form: the hoist carrying trolley runs on the lower flange of the T-beam. The girder is self-supporting and cantilevered, so it has no support staybolts, and it is directly integral with, via suitable reinforcements, the rotation tube. This version allows the optimum use of the available space at a height due to the absence of staybolts and allows the maximum use of the hook run. The arm allows the additional of electrical or mechanical push-trolleys.

"H" OVERBRACED VERSION FOR LIFTING CAPACITIES FROM 125 kg TO 2,000 kg AND JIBS FROM 4 TO 8 m

The arm is made using a laminated double T-beam form: the hoist carrying trolley runs on the lower flange of the T-beam. The arm is fitted with one or two staybolts to support the profile which connect it to the rotation tube. This version allows the use of the jib crane for loads and jibs superior to those possible with the S and T versions. The arm allows the addition of electrical and mechanical push-trolleys.

ELECTRICAL POWER SUPPLY

This is designed to power the hoist and/or electrical trolley, which run along the jib of the crane. It uses a connection box for the connection between the line and the power festoon cable, situated at the top of the column crane near the bracket support in the wall version. The column crane can be supplied, on request, with a main on / off line switch which can be padlocked. The distribution of energy takes place via a flame-retardant flat festoon cable which slides on specific trolleys or slides along the arm.



NEW S SERIES JIB CRANES IN CHANNEL PROFILE

For capacities from 63 to 1,000 kg and jibs from 2 to 7 m, with manual rotation.

The new S series combines tradition and innovation and is characterised by the extreme lightness of movement due to the low inertia resulting from its reduced weight. The arm is made using a sheet metal section bar inside which the trolley runs characterised by high movement fluidity thanks to the high quality components used. The combination of these elements makes the S series light, simple and easy to move. Its new channel profile used to create the jib crane arm is a special cold rolled sheet metal profile, which stands out due to its smooth surface, high rigidity and its reduced weight. Special guide surfaces and slightly inclined sliding surfaces, reduce the rolling friction of the hoist trolley travel wheels. The reduction of its weights means less movement effort by the operator for manual rotation of the jib crane arm. The new trolleys have the following advantages:

- Perfect sliding and maximum silence of the plastic wheels mounted on rolling bearings
- Connection of loads with pins, joint and without moments
- High vertical load capacity (horizontally up to 10% of the vertical load)

Upright
Designed to permit a wider rotation angle.

Column
Square column designed to maximise rigidity maintaining a reduced weight.

Bracket unit
Use to fix the wall-mounted crane. The configuration makes it possible to avoid complicated alignment operations during installation.

Trolley
High fluidity for a simple movement thanks to the low friction of the wheels.



Electric chain hoist DMK
Fast and suitable for all needs for capacities up to 4,000 kg.

MAX

1,000 KG

Manual movement

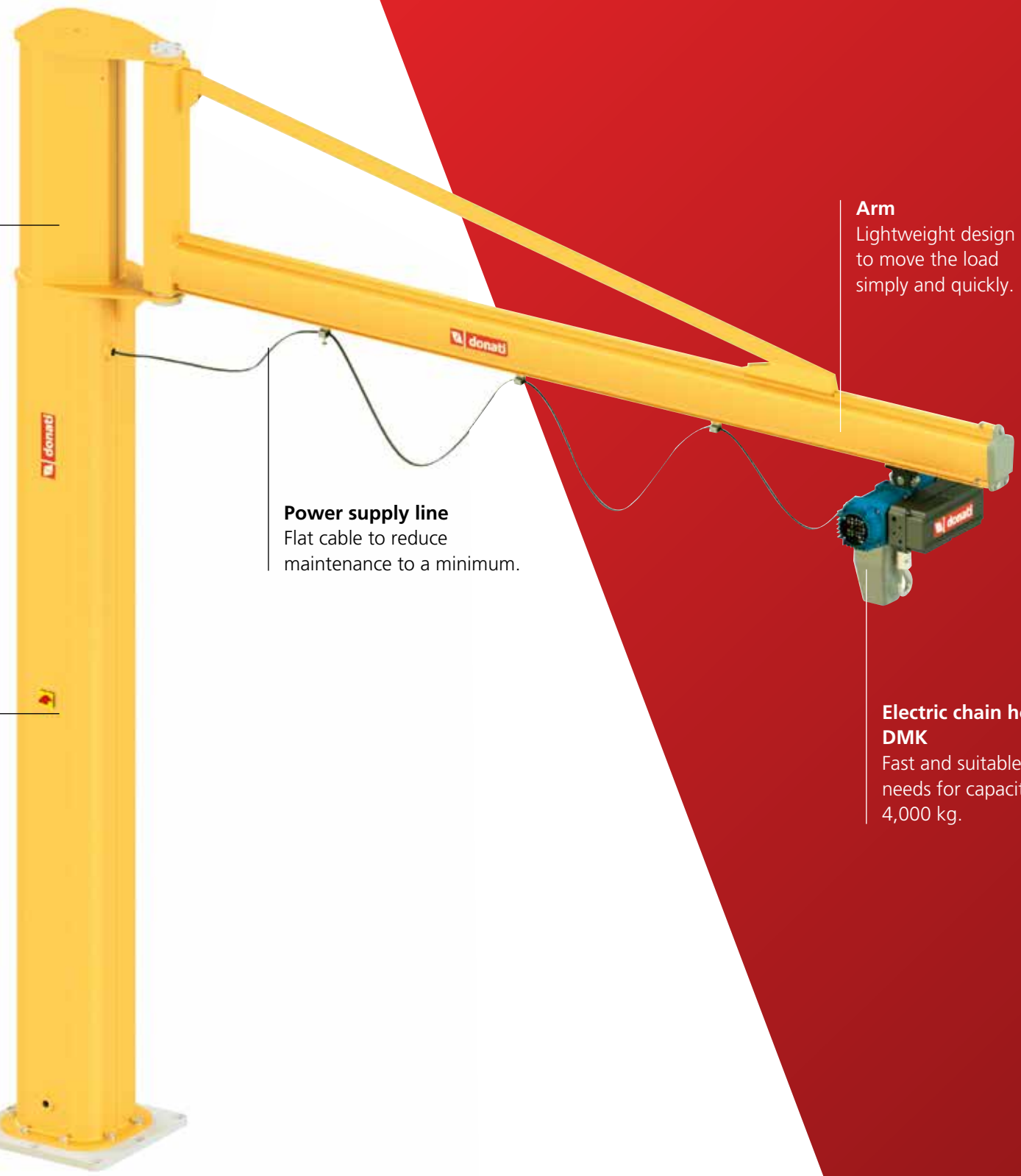

Arm
Lightweight design to move the load simply and quickly.

Power supply line
Flat cable to reduce maintenance to a minimum.

Electric chain hoist DMK
Fast and suitable for all needs for capacities up to 4,000 kg.

THE MANUALLY ROTATED JIB CRANES WITH ARTICULATED ARM IN THE CBB "COLUMN" SERIES AND THE MBB "WALL" SERIES

are designed for the handling of goods inside the plant or a building site where the presence of fixed obstacles would impede the free rotation in terms of the mobility of the arm when it is formed by one rigid element. The cranes "with an articulated arm" are fitted with an arm made of two hinged "pantograph-shaped" segments which allow it to avoid fixed obstacles during rotation. The standard models are available for capacities from 125 to 500 kg and jibs from 3 to 7 m.

ARTICULATED JIB

The jib cranes both in wall and column versions, are fitted with an "articulated arm", which rotates on its own axis.
The articulated arm is made using two cantilevered girders, which form the two hinged segments (semi-arms). The semi-arm on the "tie" side is generally made in boxed casing, while the "cantilever" side can be made using a laminated double T-beam form. The first segment (semi-arm on the tie side) rotates around the axis situated on the column or the bracket where it is fastened. The second segment (semi-arm on the cantilever side) rotates on the ends of the first segment and is fitted with a planarity regulation system. The two semi-arms can be of different lengths and are able to rotate independently of each other. Reciprocal mobility, thanks to the "pantograph" effect, allows the lifting equipment to reach any point in the area to be served, thus avoiding any obstacles to the rotation as well as increasing the surface area served behind the column or the fixing pillar of the bracket. The entire articulated arm is directly integral with, via suitable reinforcements, the rotation tube. The two-rotation arms, rotating on their own rotation axes via bearings, allow the optimal use of the available space at a height due to the absence of staybolts.

ELECTRICAL POWER SUPPLY

This powers the hoist and for the connection between the line and the power cable has: Terminal box near the support bracket in the MBB wall version. A main on / off line switch which can be padlocked on the column in the CBB version. The distribution of energy takes place via the fire retardant cable. Electrical line with round multipolar flexible cable inserted on a channel welded under the flange of the jib. Push-button panel hanging from the hoist.



JIB CRANES WITH ARTICULATED ARM

CBB SERIES

"COLUMN WITH ARTICULATED ARM"
SERIES MAXIMUM ROTATION FIELD 360°

MBB SERIES

"WALL WITH ARTICULATED ARM"
MAXIMUM ROTATION FIELD 360°

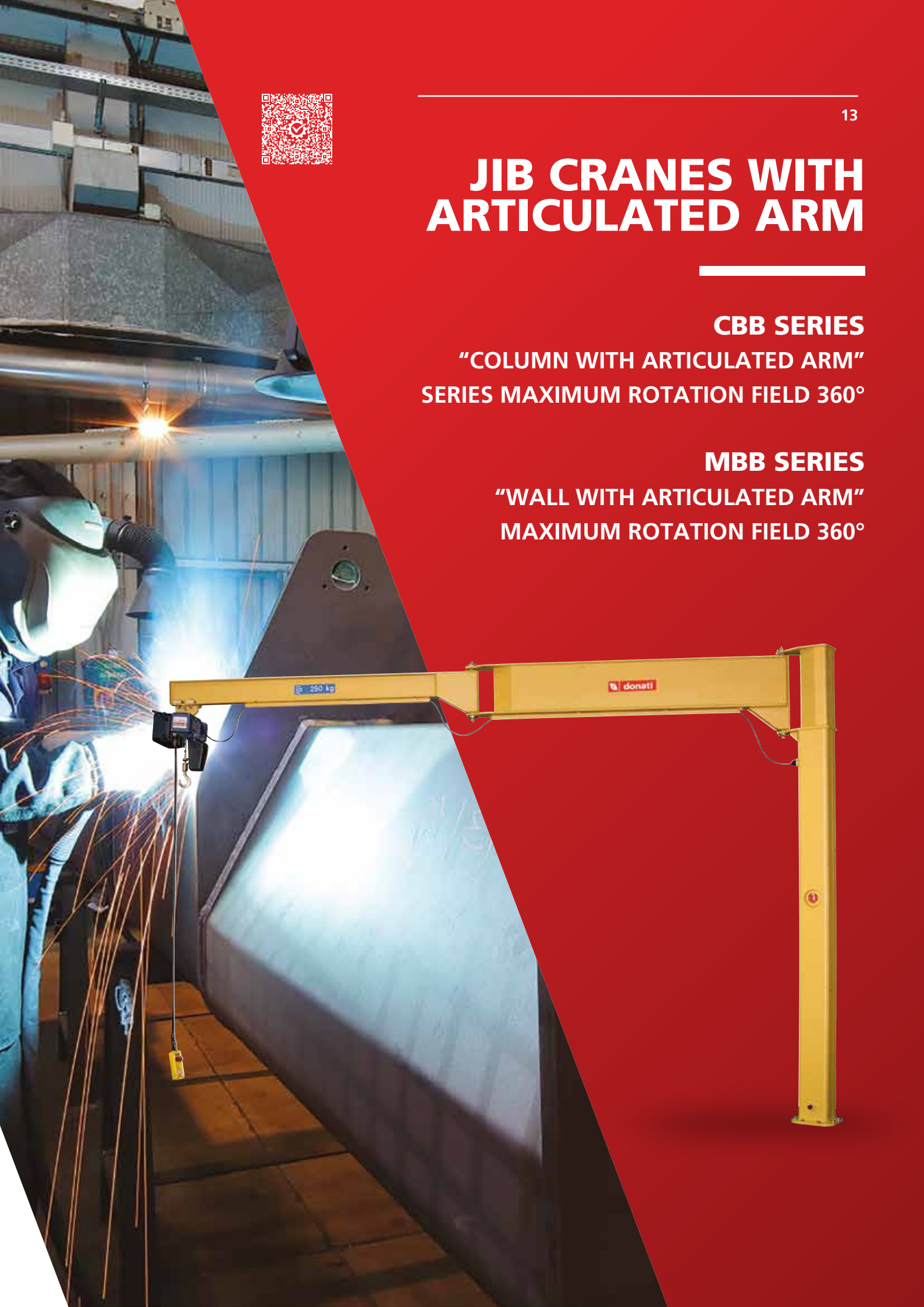

JIB CRANES WITH MOTORISED ARM

CBE “COLUMN” SERIES

MAXIMUM ROTATION FIELD 300°
(290° IN THE T VERSION)

MBE “WALL” SERIES

MAXIMUM ROTATION FIELD 270°
(250° IN THE T VERSION)

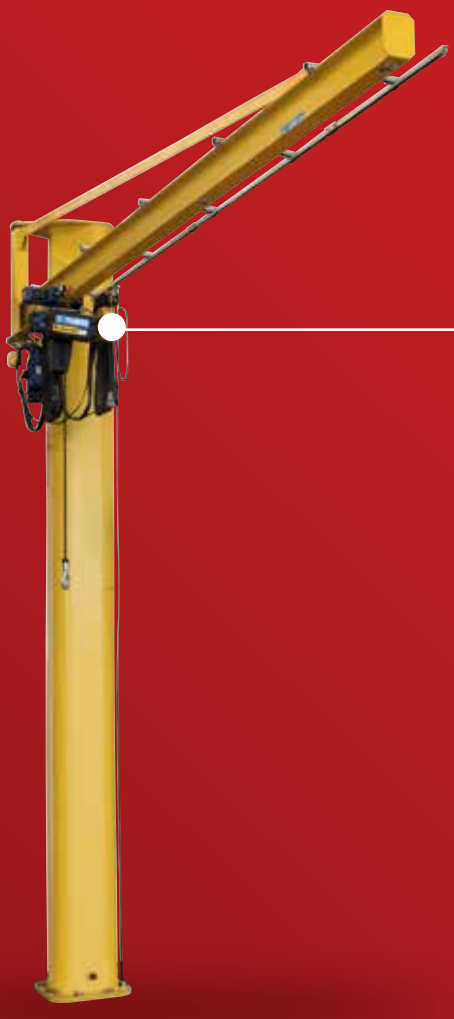



THE ELECTRICALLY ROTATED JIB CRANES WITH MOTORISED ARM IN THE CBE "COLUMN" SERIES AND THE MBE "WALL" SERIES

are designed for handling goods in areas which are difficult to reach, where the presence of fixed obstacles would impede the practicability of the working area. They are used also when the frequency of manoeuvres, the entity of the load and the push forces, could cause excessive wear and tear if carried out manually. Available in standard versions for lifting capacities from 250 to 2,000 kg and jibs from 2 to 8 m. The T and H versions are designed according to the different layouts of the arm.

"T" CANTILEVER VERSION FOR LOADS FROM 500 KG TO 2,000 KG AND JIBS FROM 3 TO 6 M

Made using a rolled steel I-beam form: the hoist carrying trolley runs on the lower flanges of the T-beam. The girder is self-supporting and cantilevered, so it has no support staybolts, and it is directly integral with, via suitable reinforcements, the rotation tube. This version allows the optimal use of the available space at a height due to the absence of staybolts and allows the maximum use of the hook run. The arm allows the additional of electrical or mechanical push-trolleys.

"H" OVERBRACED VERSION FOR LIFTING CAPACITIES FROM 250 KG TO 2,000 KG AND JIBS FROM 4 TO 8 M

Made using a laminated double T-beam form: the hoist carrying trolley runs on the lower flange of the T-beam. The arm is fitted with one or two staybolts to support the profile which connect it to the rotation tube. This version allows the use of the jib crane for lifting capacities and ranges superior to those of the T version. The arm allows the additional of electrical or mechanical push-trolleys.

ROTATING ARM

The arm, rotating around its own axis on rolling bearings, consists of a supporting girder for the run of the hoist carrying trolley.

THE ROTATION MECHANISM

Formed by a motor reducer fixed vertically in the lower part of the support bracket, made with a reducer of epicyclical type, with gears in a thermally treated oil bath and self-braking conical brake motor. The drive sprocket of the motor reducer fits together with the toothed crown integral with the arm which it powers. The progressive starting up and braking are ensured by a frequency variator (inverter) powered by alternate monophase 230V voltage. A three phase inverter is needed to supply cranes other than 400 V.

ELECTRICAL POWER SUPPLY

To power the hoist and trolley, which run along the jib of the crane as well as the rotation motor reducer- The power supply includes two electrical control panels, one for the control of the lifting and travel unit of the hoist, while the rotation control equipment is integrated with the motor reducer. Inside the panels the contactors for the control of all of the movements of the crane are positioned. The control circuits are low voltage (48V) obtained via a transformer protected by fuses. An easy-to-use connection terminal box, with numbered terminals, ensures simplicity and safety of the wiring of the cables related to all the external functions making any inspections easy to perform. The power line to power the trolley-hoist formed by flexible flat fire-retardant multipolar cables festooned on the sliding trolleys on the lower flange of the beam. The push-button control panel, suspended on the hoist, with a shockproof thermoplastic case, supported by a round multipolar cable and suspended with specific ropes. When necessary it is fitted with a rapid socket with obliged polarity to make it easier to assemble and replace. On request an independent, sliding, push-button panel can be installed along the jib of the crane, via cable-carrying trolleys inside a channel profile via multipolar cable with festoons. Acoustic alarm, when included, controlled by an "alarm" button serves the function of acoustic warning to indicate any dangerous situations during handling. Electric safety limit switch on the rotation movements, installed as standard to delineate the rotation field of the arm of the crane. Working on the auxiliary circuits at low voltage, two thresholds of intervention both in right rotation and left, also carry out the emergency function in safety if there is any fault or malfunctioning of the first threshold of intervention.

For the connections to the line, there are:

- a main on/off switch on the jib crane which can be padlocked
- a connector block on the bracket crane.

Powered by alternate electric power with three-phase voltage + neutral + earth (~ 3+N+T).

360° ELECTRICALLY ROTATED JIB CRANES GBR "COLUMN" SERIES

GBR "COLUMN" SERIES

ROTATION FIELD 360° CONTINUOUS ROTATION

THE GBR SERIES ELECTRICALLY ROTATED JIB CRANES

Are used to handle loads whose mass (high or bulky) does not allow manual handling. They are also used when fixed obstacles impede the practicability of the working surface. They are the ideal solution for handling:

- in outdoor squares and deposits
- on harfs, to load and unload materials for watercraft
- on harfs to haul boats
- on loading ramps, for handling materials for lorries
- for services of big operating units or assembling machines

Available as standard for lifting loads from 1,000 to 10,000 Kg and jibs from 4 to 10.5 m.

COLUMN

Made of press-forged steel sheet welded to the tubular structure with octagonal section it allows a high rigidity and stability; it is fixed with a base plate and a system of bolts or lug bolts. The upper part is fitted with a flange for fixing the rotation thrust bearing.

ROTATING ARM

This is formed by a supporting girder and, in relation to the lifting capacity and/or the jib length, can be made rolled steel I-beam form or box beam designed to guarantee the maximum flexotorsional stability. In the construction of the supporting box beam high quality section steel is used and welded carried out with continuous line procedure to ensure optimal safety conditions and operative reliability of the crane. It is fitted with a flange with holes for the application of the thrust bearing to which it is fixed using high resistance bolts. The rotation of the arm of the crane, which is mounted on a rotating thrust bearing, is ensured via a motoreducer. The circular area served by the arm can, according to necessity, be limited by electrical limit switches, or allow continual rotations, without end, of the arm itself in both directions by a collector ring.

ROTATION MECHANISMS

Base bearing or thrust bearing, able to support both axial pushes, due to vertical forces and the tilting momentum due to the movement.

MOTOREDUCER

fitted on the arm, fitted with a selfbraking motor with progressive start-up and braking where the sprocket, keyed on the slow shaft, fits together with the internal toothing of the thrust bearing to which it gives movement.

FIXING SYSTEM

The foundation frame with lug bolts is supplied, on request, for fixing the column to the base (foundation plinth).

ELECTRICAL POWER SUPPLY

Made for powering the hoist and trolley which run along the arm of the crane as well as to power the rotation motoreducer and includes two electrical control panels, one to control lifting and movement unit on the trolley/hoist, while the control apparatus of the rotation motoreducer is integral with the arm. Inside the panels there are the contactors for the control of all of the movements, as well as protection fuses against short circuits. The control circuits are low voltage obtained via a transformer protected by fuses. A connection terminal box, with numbered terminals, ensures simplicity and safety of the wiring of the cables relative to all the external functions making any inspection

easy to perform. Alternatively, on request, the crane can be supplied with one electrical panel only made of press-forged sheet, which contains the contactors and the timers to control all the movements of the crane, as well as protection fuses against short circuits. The control circuits are low voltage. A connection terminal box ensures simplicity and safety of the wiring of the cables related to all the external functions making any inspections easy to perform. The electrical line to power the trolley-hoist formed by flexible flat fire-retardant multipolar cables festooned on the trolleys which slide inside a channel section. A hanging push-button control panel, with shockproof thermoplastic casing, sliding, along the crane girder, via trolleys inside a channel section using festooned flexible multipolar cable. It is supported by a round multipolar cable and suspended by specific ropes. It is generally fitted with a rapid socket with obliged polarity to make it easier to assemble and replace. Acoustic alarm, when included, controlled by an "alarm" button serves the function of acoustic warning to indicate any dangerous situations during handling. Rotating collector ring installed when the arm of the crane is free from obstacles in every point of its rotation and the arm itself is required to rotate continuously in both directions. Electric safety limit switch on the rotation movements, installed to delineate the rotation field of the arm of the crane. Acting on the auxiliary circuits at low voltage, two thresholds of intervention both in right rotation and left, also carry out the emergency function in safety if there is any fault or malfunctioning of the first threshold of intervention.



ELECTRICALLY AND MANUALLY ROTATED JIB CRANES 360°

GBL “COLUMN” SERIES

360° ROTATION WITH CONTINUOUS ROTATION



THE GBL SERIES ELECTRICALLY OR MANUALLY ROTATED JIB CRANES

Are the ideal solution for handling loads in internal environments. Available as standard for lifting loads from itself 1,000 to 5,000 kg and jibs from 4 to 8 m with electrical rotation and up to 2,000 kg with manual rotation.

COLUMN

Made of press-forged steel sheet welded to the tubular structure with octagonal section it allows a high rigidity and stability; it is fixed with a base plate and a system of lug bolts. The upper part is equipped with a flange for fixing the sprocket (for electrical rotation of the arm) and ball bearing for centring and rotation of the arm on the column and a rolling track.

ROTATING ARM

This is formed by a supporting girder made in rolled steel I-beam, a centring pin on the vertical axis of the column and a reaction arm with roller box which slide on the rolling track of the column.
The electrical rotation of the crane arm is ensured by a motoreducer which is connected to the arm. The circular area served by the arm can, according to necessity, be limited by electrical limit switches, or allows continual rotations in both directions through the use of a rotating collector ring.

ROTATION MECHANISMS

Composed of a motoreducer fitted on the arm, fitted with a self-braking motor with progressive start-up and braking where the sprocket, keyed on the slow shaft, fits together with the external toothing of the crown attached to the column.

FIXING SYSTEM

The foundation frame with lug bolts is supplied, on request, for fixing the column to the base (foundation plinth). For cranes with capacity up to 2,000 kg and jig up to 8 m, the fixing may also be done with the use of chemical bolts and specific counterplate.

ELECTRICAL POWER SUPPLY

Made for powering the hoist and trolley which run along the arm of the crane as well as to power the rotation motoreducer and includes two electrical control panels, one to control lifting and movement unit on the hoist/trolley, while the control apparatus of the rotation motoreducer is integral with the arm. Inside the panels there are the contactors for the control of all of the movements, as well as protection fuses against short circuits. The control circuits are low voltage obtained via a transformer protected by fuses. A connection terminal box, with numbered terminals, ensures simplicity and safety of the wiring of the cables related to all the external functions making any inspections easy to perform. The electrical line to power the trolley-hoist formed by flexible flat fire-retardant multipolar cables festooned on the trolleys which slide inside a channel section. Push-button panel hanging from the hoist/trolley control equipment. It is supported by a round multipolar cable and suspended by specific ropes. Remote control when requested as an alternative to the traditional push-button panel, in cases of bulky loads in order to remotely control all movements. Acoustic alarm, controlled by an “alarm” button serves the function of acoustic warning to indicate any dangerous situations during handling. Rotating collector ring installed when the arm of the crane is free from obstacles in every point of its rotation and the arm itself is required to rotate continuously in both directions. Electric safety limit switch on the rotation movements, when requested, installed to delineate the rotation field of the arm of the crane. Acting on the low voltage auxiliary circuits, it has two thresholds of intervention both in right rotation and left, also carry out the emergency function in safety if there is any fault or malfunctioning of the first threshold of intervention.

CRITERIA OF CHOICES AND LIMITS OF USE OF THE JIB CRANES

To obtain the complete responsiveness of the jib cranes, for the service they are intended for, it is necessary to check the parameters which characterise their limits of use and, thus, the right choice.
These are essentially the actual lifting capacity, the stress level and the functional parameters.

ACTUAL LIFTING CAPACITY
This is determined by the heaviest load to be lifted.



STRESS LEVEL

The stress level is determined considering the actual entity of the loads to be lifted and it is ascribable to one of the four load regimes shown below.

1) Light

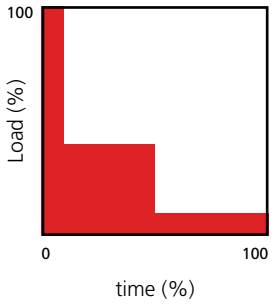

Crane which rarely lifts maximum loads but mainly reduced loads.

2) Medium

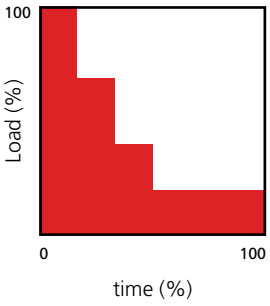

Crane which lifts in approximately the same proportions of maximum, medium and reduced loads.

3) Heavy

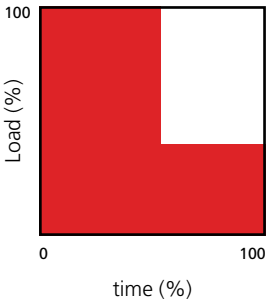

Crane which frequently lifts the maximum load but normally medium loads.

4) Very heavy

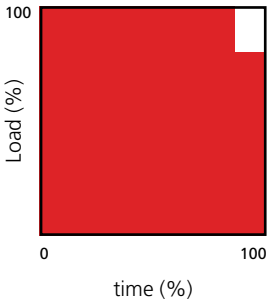

Crane which regularly lifts loads close to the maximum load.

FUNCTIONAL PARAMETERS

The functional parameters which must be carefully considered in the choice of jib cranes are:

- Functional dimensions: height of the arm, which determines the hook run of the hoist, and its jib must be selected so as to guarantee the functional coverage of the area to be served in consideration of the surrounding environment.
- Type of travel (where necessary): manual or electric in relation to the characteristics of the mass to handle and the type of arm already selected.
- Nature of the load: delicate or not determines by its positioning the choice of the most suitable speeds of handling (lifting and travel).. In some cases it is indispensible to use hoists with two speeds with a slow speed of positioning.
- Area of use: the jib crane is characterised, by its conception, by intrinsic high elasticity which becomes even more evident when it is used for handling with loads close to the maximum lifting capacity and/or with prevalent localisation at the ends of the arm.
- Area of use: the jib cranes are intended to be used inside and/or in a covered area, sheltered from bad weather and the wind. Measures must be taken for outdoor use for a suitable surface treatment (sandblasting - painting (as well as):
  - for manually rotated cranes: an arm parking brake system and an adequate protection cover for the hoist-trolley.
  - for electrically rotated cranes: adequate protective covers for the hoist-trolley, for the motoreducer and for the electric panel.
- Frequency of use: if use is very high (frequent and/or repeated manoeuvres) with loads close to the maximum load the consequent fatigue of the operator due to manual handling must be taken into consideration.

Check, on the basis of the stress level intended for the crane, that the limits of use, type of service and n° of cycles intended in 10 years of work are not in contrast with the following table.

LIMITS OF USE OF THE JIB CRANES OF THE SERVICE CLASS ISO A5(ACCORDING TO ISO 4301-1/88)				
STRESS LEVEL	**1) LIGHT**	**2) MEDIUM**	**3) HEAVY**	**4) VERY HEAVY**
Type of service	intense irregular use	intermittent irregular use	regular light use	irregular use
Conditions of use	U 6	U 5	U 4	U 3
N° of operative cycles in 10 years	1.000.000	500.000	250.000	125.000

GBP/GBA SERIES JIB CRANES – S VERSION – CHANNEL PROFILE VERSION

Wall-mounted jib crane
Rotation 270°

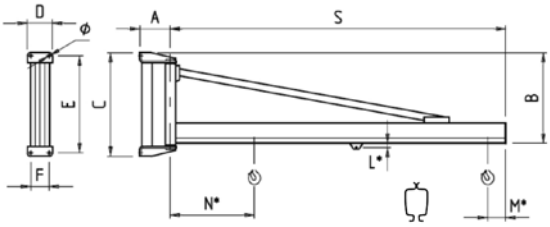

Column-mounted jib crane
Rotation 300°

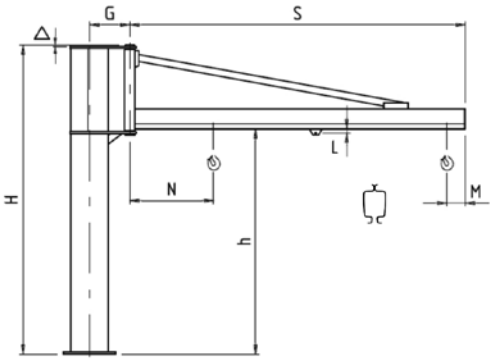

Heights L*, M* and N* for wall-mounted jib cranes. See corresponding heights relative to column-mounted jib cranes.

LIFTING CAPACITY (kg)	ARM S		SIZE OF JIB CRANE			TROLLEY TYPE	GBP SERIES WALL-MOUNTED JIB CRANES - S VERSION									GBA SERIES COLUMN-MOUNTED CRANE - VERSION S												
								OVERALL DIMENSIONS (mm)								HEIGHT H m			OVERALL DIMENSIONS (mm)							WEIGHT	
	ARM (m)	ARM C/W COVER (mm)	BRACKET	COLUMN	COUNTERPLATE		TYPE	A	B	C	D	E	F	Ø	WEIGHT JIB CRANE kg	BASE	MAX.	TYPE	UNDER BEAM h	G	L	M	N	Δ	JIB CRANE kg	COLUMN BY m kg
63	4	3999	A	R	R	1	S01A41	170	552	644	200	594	150	17	60.2	3	5	S30R41	2498	228	38	100	522	12	102.3	18.2
	5	4999	A	R	R	1	S01A51	170	552	644	200	594	150	17	68.1	3	5	S30R51	2498	228	38	100	582	12	110.2	18.2
	6	5997	C	T	T	2	S02C61	210	820	930	250	870	190	22	171.3	3.5	5.5	S35T61	2740	323	35	115	730	12	266.1	35
	7	6997	C	T	T	2	S02C71	210	820	930	250	870	190	22	189.3	3.5	5.5	S35T71	2740	323	35	115	790	12	284.1	35
125	2	1999	A	R	R	1	S01A23	170	552	644	200	594	150	17	44.4	3	5	S30R23	2498	228	38	100	452	12	86.5	18.2
	3	2999	A	R	R	1	S01A33	170	552	644	200	594	150	17	52.2	3	5	S30R33	2498	228	38	100	522	12	94.3	18.2
	4	3999	B	S	S	1	S01B43	170	552	644	200	594	150	17	60.1	3	5	S30S43	2498	274	38	100	522	12	116	22.8
	5	4999	C	T	T	2	S02C53	210	820	930	250	870	190	22	152.2	3.5	5.5	S35T53	2740	323	35	115	670	17	247	35
	6	5997	C	T	T	2	S02C63	210	820	930	250	870	190	22	171.3	3.5	5.5	S35T63	2740	323	35	115	730	17	266.1	35
	7	6997	C	T	T	2	S02C73	210	820	930	250	870	190	22	190	3.5	5.5	S35T73	2740	323	35	115	790	17	284.8	35
250	2	1999	A	R	R	1	S01A24	170	552	644	200	594	150	17	44.7	3	5	S30R24	2498	274	38	100	452	12	86.8	18,2
	3	2999	B	S	S	1	S01B34	170	552	644	200	594	150	17	52.6	3	5	S30S34	2498	274	38	100	522	12	108.5	22.8
	4	3997	C	T	T	1	S02C44	210	820	930	250	870	190	22	90.7	3.5	5.5	S35T44	2740	323	38	100	592	17	185.5	35
	5	4999	C	T	T	2	S02C54	210	820	930	250	870	190	22	152.2	3.5	5.5	S35T54	2740	323	35	115	670	17	247	35
	6	5997	D	U	U	2	S02D64	210	820	930	250	870	190	22	171.7	3.5	5.5	S35U64	2740	386	35	115	730	17	296.3	43.5
	7	6997	D	U	U	2	S02D74	210	820	930	250	870	190	22	190	3.5	5.5	S35U74	2740	386	35	115	790	17	314.6	43.5
500	2	1997	C	T	T	2	S02C25	210	820	930	250	870	190	22	94.5	3.5	5.5	S35T25	2740	323	35	115	540	17	189.3	35
	3	2997	C	T	T	2	S02C35	210	820	930	250	870	190	22	113.6	3.5	5.5	S35T35	2740	323	35	115	600	17	225.9	35
	4	3997	D	U	U	2	S02D45	210	820	930	250	870	190	22	132.7	3.5	5.5	S35U45	2740	386	35	115	600	17	257.3	43.5
	5	4997	D	U	U	2	S02D55	210	820	930	250	870	190	22	153.2	3.5	5.5	S35U55	2740	386	35	115	670	17	277.8	43.5
	6	5997	E	V	V	2	S03E65	255	1100	1240	300	1160	220	34	240.4	4	6	S40V65	2982	443	35	115	760	20	443.9	64
	7	6997	E	V	V	2	S03E75	255	1100	1240	300	1160	220	34	269.8	4	6	S40V75	2982	443	35	115	830	20	473.3	64
800	7	6997	F	Z	Z1	2D	S03F76	255	1100	1240	300	1160	220	34	296.1	4	6	S40Z76	2982	513	53	265	980	20	544.4	75.2
1000	2	1997	C	T	T	2D	S02C27	210	820	930	250	870	190	22	95.2	3.5	5.5	S35T27	2740	323	53	265	690	17	190	35
	3	2997	D	U	U	2D	S02D37	210	820	930	250	870	190	22	114.2	3.5	5.5	S35U37	2740	386	53	265	750	17	238.8	43.5
	4	3997	E	V	V	2D	S03E47	255	1100	1240	300	1160	220	34	193.5	4	6	S40V47	2982	443	53	265	780	20	397	64
	5	4997	E	V	V	2D	S03E57	255	1100	1240	300	1160	220	34	246.4	4	6	S40V57	2982	443	53	265	850	20	449.9	64
	6	5997	F	Z	Z1	2D	S03F67	255	1100	1240	300	1160	220	34	276	4	6	S40Z67	2982	513	53	265	910	20	524.3	75.2

GBP/GBA SERIES JIB CRANES – T VERSION – CANTILEVER VERSION

250° Wall-mounted jib crane
Rotation 250°

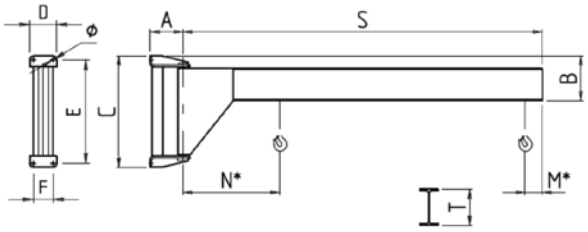

290° Column-mounted jib crane
Rotation 290°

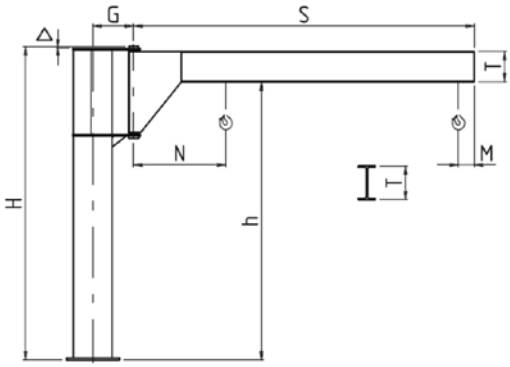

Heights M* and N* for wall-mounted jib cranes. See corresponding heights relative to column-mounted jib cranes.

LIFTING CAPACITY (kg)	ARM S m	SIZE OF JIB CRANE			GBP SERIES WALL-MOUNTED JIB CRANES - T VERSION									HEIGHT H m		GBA SERIES COLUMN-MOUNTED CRANE - VERSION T								
		BRACKET	COLUMN	COUNTERPLATE	TYPE	OVERALL DIMENSIONS (mm)							WEIGHT JIB CRANE kg	BASE	MAX.	TYPE	OVERALL DIMENSIONS (mm)						WEIGHT	
						A	B	C	D	E	F	Ø					UNDER BEAM h	G	M	N	T (IPE)	Δ	JIB CRANE kg	COLUMN BY m kg
63	4	A	R	R	T01A41	170	248	644	200	594	150	15	95	3	5	T30R41	2800	228	190	655	160	12	148	18.2
	5	A	R	R	T01A51	170	248	644	200	594	150	15	111	3	5	T30R51	2800	228	190	715	160	12	164	18.2
125	2	A	R	R	T01A23	170	248	644	200	594	150	15	63	3	5	T30R23	2800	228	190	595	160	12	116	18.2
	3	A	R	R	T01A33	170	248	644	200	594	150	15	79	3	5	T30R33	2800	228	190	655	160	12	132	18.2
	4	B	S	S	T01B43	170	288	644	200	594	150	15	125	3	5	T30S43	2760	274	190	725	200	12	200	22.8
	5	B	S	S	T01B53	170	288	644	200	594	150	15	147	3	5	T30S53	2760	274	190	785	200	12	222	22.8
250	2	B	S	S	T01B24	170	288	644	200	594	150	15	81	3	5	T30S24	2760	274	190	665	200	12	156	22.8
	3	B	S	S	T01B34	170	288	644	200	594	150	15	103	3	5	T30S34	2760	274	190	725	200	12	178	22.8
	4	C	T	T	T02C44	210	346	930	250	870	190	22	195	3.5	5.5	T35T44	3212	323	190	800	240	17	320	35
	5	C	T	T	T02C54	210	346	930	250	870	190	22	226	3.5	5.5	T35T54	3212	323	190	860	240	17	351	35
	6	D	U	U	T02D64	210	406	930	250	870	190	22	340						190	1000	300			
	6	E	V	V	T03E64	255	500	1240	300	1160	220	34	410	4	6	T40V64	3640	443	190	1065	300	20	705	64
	7	E	V	V	T03E74	255	500	1240	300	1160	220	34	555	4	6	T40V74	3580	443	190	1135	360	20	852	64
500	2	C	T	T	T02C25	210	346	930	250	870	190	22	134	3.5	5.5	T35T25	3212	323	190	740	240	17	260	35
	3	C	T	T	T02C35	210	346	930	250	870	190	22	165	3.5	5.5	T35T35	3212	323	190	800	240	17	290	35
	4	D	U	U	T02D45	210	406	930	250	870	190	22	256	3.5	5.5	T35U45	3152	386	190	880	300	17	430	43.5
	5	D	U	U	T02D55	210	406	930	250	870	190	22	298	3.5	5.5	T35U55	3152	386	190	940	300	17	472	43.5
	6	E	V	V	T03E65	255	500	1240	300	1160	220	34	482	4	5	T40V65	3580	443	190	1140	360	20	779	64
	6	F	Z	Z1										4	6	T40Z65	3580	513	190	1140	360	20	864	75.2
	7	E	V	V	T03E75	255	540	1240	300	1160	220	34	596	4	4	T40V75	3540	443	190	1270	400	20	893	64
	7	F	Z	Z1										4	6	T40Z75	3540	513	190	1270	400	20	978	75.2
1000	2	D	U	U	T02D27	210	406	930	250	870	190	22	172	3.5	5.5	T35U27	3152	386	190	820	300	17	346	43.5
	3	D	U	U	T02D37	210	406	930	250	870	190	22	214	3.5	5.5	T35U37	3152	386	190	880	300	17	388	43.5
	4	E	V	V	T03E47	255	499	1240	300	1160	220	34	381	4	6	T40V47	3580	443	190	945	360	20	678	64
	5	E	V	V	T03E57	255	499	1240	300	1160	220	34	438	4	6	T40V57	3580	443	190	1005	360	20	735	64
	6	F	Z	Z1	T03F67	255	540	1240	300	1160	220	34	530	4	4	T40Z67	3540	513	190	1190	400	20	912	75.2
	7	F	Z	Z1	T03F77	255	590	1240	300	1160	220	34	688						190	1270	450			
1600	6	F	Z	Z2	T03F68	255	590	1240	300	1160	220	34	610						190	1270	450			
2000	2	E	V	V	T03E29	255	499	1240	300	1160	220	34	267	4	6	T40V29	3580	443	210	900	360	20	564	64
	3	E	V	V	T03E39	255	499	1240	300	1160	220	34	324	4	6	T40V39	3580	443	210	960	360	20	621	64
	4	F	Z	Z2	T03F49	255	540	1240	300	1160	220	34	400	4	6	T40Z49	3540	513	210	1070	400	20	780	75.2
	5	F	Z	Z2	T03F59	255	590	1240	300	1160	220	34	535						210	1220	450			

GBP/GBA SERIES JIB CRANES – H VERSION – OVERBRACED VERSION

Wall-mounted jib crane
Rotation 270°

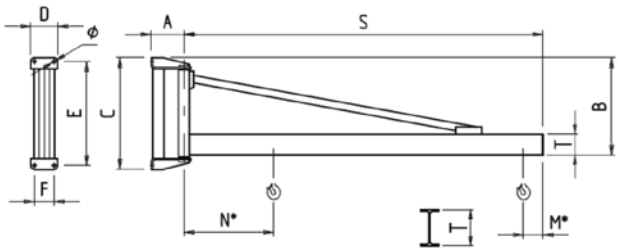

Column-mounted jib crane
Rotation 300°

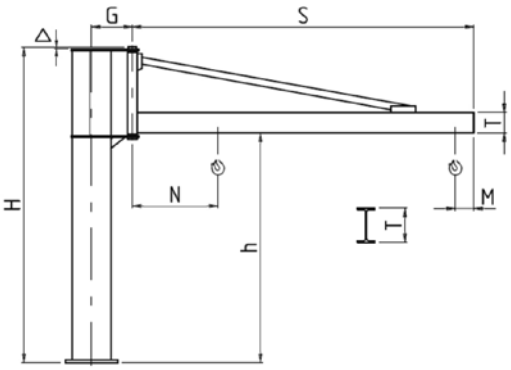

Heights M* and N* for wall-mounted jib cranes. See corresponding heights relative to column-mounted jib cranes.

LIFTING CAPACITY (kg)	ARM S m	SIZE OF JIB CRANE			GBP SERIES WALL-MOUNTED JIB CRANES - H VERSION									GBA SERIES COLUMN-MOUNTED CRANE - VERSION H										
						OVERALL DIMENSIONS (mm)								HEIGHT H m			OVERALL DIMENSIONS (mm)						WEIGHT	
		BRACKET	COLUMN	COUNTERPLATE	TYPE	A	B	C	D	E	F	Ø	WEIGHT JIB CRANE kg	BASE	MAX.	TYPE	UNDER BEAM h	G	M	N	T (IPE)	Δ	JIB CRANE kg	COLUMN BY m kg
	6	C	T	T	H02C63	210	820	930	250	870	190	22	160	3.5	5.5	H35T63	2738	323	190	900	160	17	285	35
125	7	C	T	T	H02C73	210	820	930	250	870	190	22	180	3.5	5.5	H35T73	2738	323	190	960	160	17	305	35
	8	D	U	U	H02D83	210	820	930	250	870	190	22	251	3.5	5.5	H35U83	2738	386	190	1070	200	17	425	43.5
	4	C	T	T	H02C44	210	820	930	250	870	190	22	122	3.5	5.5	H35T44	2738	323	190	780	160	17	247	35
	5	C	T	T	H02C54	210	820	930	250	870	190	22	141	3.5	5.5	H35T54	2738	323	190	840	160	17	266	35
250	6	D	U	U	H02D64	210	820	930	250	870	190	22	200	3.5	5.5	H35U64	2738	386	190	950	200	17	374	43.5
	7	D	U	U	H02D74	210	820	930	250	870	190	22	226	3.5	5.5	H35U74	2738	386	190	1010	200	17	400	43.5
	8	E	V	V	H03E84	255	1100	1240	300	1160	220	34	303	4	6	H40V84	2980	443	190	1140	200	20	620	64
	4	D	U	U	H02D45	210	820	930	250	870	190	22	149	3.5	5.5	H35U45	2738	386	190	830	200	17	323	43.5
	5	D	U	U	H02D55	210	820	930	250	870	190	22	175	3.5	5.5	H35U55	2738	386	190	890	200	17	349	43.5
500	6	E	V	V	H03E65	255	1100	1240	300	1160	220	34	262	4	6	H40V65	2980	443	190	1020	200	20	559	64
	7	E	V	V	H03E75	255	1100	1240	300	1160	220	34	293	4	6	H40V75	2980	443	190	1080	200	20	590	64
	8	F	Z	Z1	H03F85	255	1100	1240	300	1160	220	34	389	4	6	H40Z85	2980	513	190	1240	240	20	771	75.2
	4	E	V	V	H03E47	255	1100	1240	300	1160	220	34	200	4	6	H40V47	2980	443	190	900	200	20	497	64
	5	E	V	V	H03E57	255	1100	1240	300	1160	220	34	231	4	6	H40V57	2980	443	190	960	200	20	528	64
1000	6	F	Z	Z1	H03F67	255	1100	1240	300	1160	220	34	312	4	6	H40Z67	2980	513	190	1120	240	20	694	75.2
	7	F	Z	Z1	H03F77	255	1100	1240	300	1160	220	34	351	4	6	H40Z77	2980	513	190	1180	240	20	733	75.2
	8	F	Z	Z2	H03F87	255	1100	1240	300	1160	220	34	430	4	6	H40Z87	2980	513	190	1180	*152	20	812	75.2
1600	6	F	Z	Z2	H03F68	255	1100	1240	300	1160	220	34	312	4	6	H40Z68	2980	513	210	1140	240	20	694	75.2
2000	4	F	Z	Z2	H03F49	255	1100	1240	300	1160	220	34	233	4	6	H40Z49	2980	513	210	1020	240	20	615	75.2
	5	F	Z	Z2	H03F59	255	1100	1240	300	1160	220	34	272	4	6	H40Z59	2980	513	210	1080	240	20	654	75.2

* Profiled girder type HEA160

GBA SERIES JIB CRANES WITH DOUBLE ARM *C VERSION – PROFILED CHANNEL

Column-mounted jib crane
Rotation 260°+260°

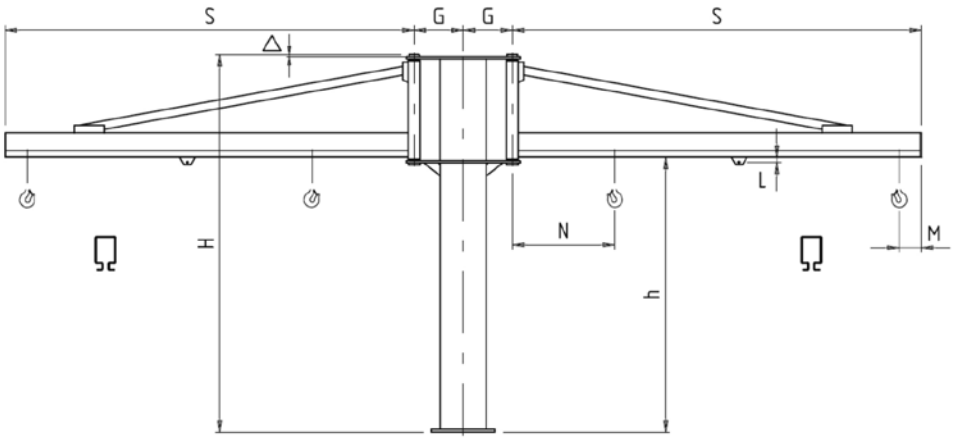

LIFTING CAPACITY (kg)	ARM S		SIZE OF JIB CRANE		TROLLEY TYPE	GBA SERIES COLUMN-MOUNTED CRANE - VERSION C										
						HEIGHT H m		TYPE	OVERALL DIMENSIONS (mm)						WEIGHT	
	ARM (m)	ARM C/W COVER (mm)	COLUMN	COUNTERPLATE		BASE	MAX.		UNDER BEAM h	G	L	M	N	Δ	JIB CRANE kg	COLUMN BY m kg
63+63	2	1999	R	R	1	3	5	S30G21	2498	228	38	100	452	12	128	18,2
	3	2999	R	R	1	3	5	S30G31	2498	228	38	100	522	12	149	18,2
	4	3999	S	S	1	3	5	S30H41	2498	274	38	100	522	12	193	22,8
	5	4999	S	S	1	3	5	S30H51	2498	274	38	100	582	12	219	22,8
	6	5997	T	T	2	3,5	5,5	S30I61	2740	323	35	115	730	12	400	35
	7	6997	T	T	2	3,5	5,5	S30I71	2740	323	35	115	790	12	433	35
125+125	2	1999	S	S	1	3	5	S30H23	2498	274	38	100	452	12	152	22,8
	3	2999	S	S	1	3	5	S30H33	2498	274	38	100	522	12	173	22,8
	4	3999	T	T	1	3,5	5,5	S30I43	2498	323	38	100	522	12	289	35
	5	4999	T	T	1	3,5	5,5	S30I53	2498	323	38	100	582	12	366	35
	6	5997	U	U	2	3,5	5,5	S35L63	2740	386	35	115	730	17	454	43,5
	7	6997	U	U	2	3,5	5,5	S35L73	2740	386	35	115	790	17	487	43,5
250+250	2	1999	T	T	1	3,5	5,5	S30I24	2498	323	38	100	452	12	263	35
	3	2999	T	T	1	3,5	5,5	S30I34	2498	323	38	100	522	12	297	35
	4	3997	U	U	1	3,5	5,5	S35L44	2740	386	38	100	592	17	401	43,5
	5	4999	U	U	2	3,5	5,5	S35L54	2740	386	35	115	670	17	439	43,5
	6	5997	V	V	2	4	6	S35M64	2740	443	35	115	730	17	763	64
	7	6997	V	V	2	4	6	S35M74	2740	443	35	115	790	17	849	64
500+500	2	1997	U	U	2	3,5	5,5	S35L25	2738	386	35	115	540	17	318	43,5
	3	2997	U	U	2	3,5	5,5	S35L35	2738	386	35	115	600	17	351	43,5
	4	3997	V	V	2	4	6	S35M45	2980	443	35	115	600	17	659	64
	5	4997	V	V	2	4	6	S35M55	2980	443	35	115	670	17	740	64
	6	5997	Z	Z1	2	4	6	S40N65	2980	513	35	115	760	20	947	75,2
	7	6997	Z	Z1	2	4	6	S40N75	2980	513	35	115	830	20	1004	75,2
1000+1000	2	1997	V	V	2D	4	6	S35M27	2980	443	53	265	690	17	475	64
	3	2997	V	V	2D	4	6	S35M37	2980	443	53	265	750	17	498	64
	4	3997	Z	Z2	2D	4	6	S40N47	2980	513	53	265	780	20	751	75,2
	5	4997	Z	Z2	2D	4	6	S40N57	2980	513	53	265	850	20	833	75,2

* Availability subject to confirmation

GBA SERIES JIB CRANES WITH DOUBLE ARM – T VERSION – CANTILEVER PROFILED GIRDER

Column-mounted jib crane
Rotation 260°+260°

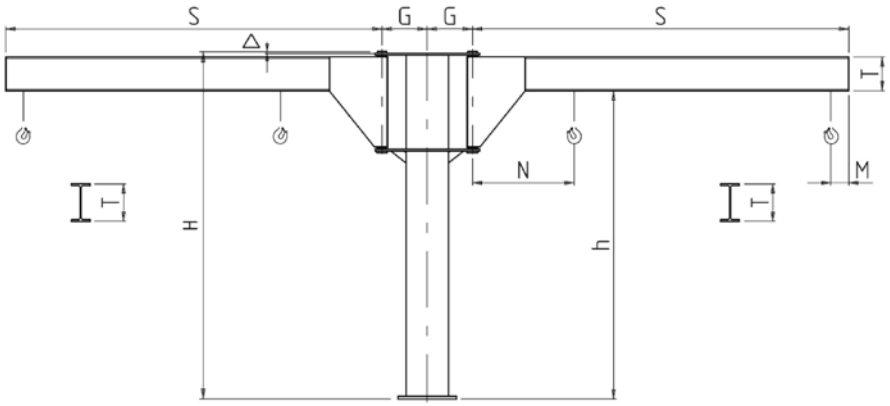

LIFTING CAPACITY (kg)	ARM S m	SIZE OF JIB CRANE		GBA SERIES COLUMN-MOUNTED CRANE - VERSION T										
				HEIGHT H m		TYPE	OVERALL DIMENSIONS (mm)						WEIGHT	
		COLUMN	COUNTERPLATE	BASE	MAX.		UNDER BEAM h	G	M	N	T (IPE)	Δ	JIB CRANE kg	COLUMN BY m kg
63+63	2	R	R	3	5	T30G21	2800	228	190	595	160	12	170	18.2
	3	R	R	3	5	T30G31	2800	228	190	655	160	12	202	18.2
	4	S	S	3	5	T30H41	2800	274	190	725	160	12	257	22.8
	5	S	S	3	5	T30H51	2800	274	190	785	160	12	290	22.8
125+125	2	S	S	3	5	T30H23	2800	274	190	595	160	12	193	22.8
	3	S	S	3	5	T30H33	2800	274	190	655	160	12	225	22.8
	4	T	T	3.5	5.5	T35I43	3212	323	190	800	240	17	496	35
	5	T	T	3.5	5.5	T35I53	3212	323	190	860	240	17	558	35
	6	V	V	4	6	T40M63	3640	443	190	1065	300	20	1092	64
	7	V	V	4	6	T40M73	3580	443	190	1135	360	20	1385	64
250+250	2	T	T	3.5	5.5	T35I24	3212	323	190	740	240	17	375	35
	3	T	T	3.5	5.5	T35I34	3212	323	190	800	240	17	436	35
	4	U	U	3.5	5.5	T35L44	3212	386	190	800	240	17	550	43.5
	5	U	U	3.5	5.5	T35L54	3212	386	190	860	240	17	612	43.5
	6	V	V	4	5	T40M64	3640	443	190	1065	300	20	1092	64
	6	Z	Z1	4	6	T40N64	3640	513	190	1065	300	20	1183	75.2
	7	V	V	4	4	T40M74	3580	443	190	1135	360	20	1385	64
	7	Z	Z1	4	6	T40N74	3580	513	190	1135	360	20	1477	75.2
500+500	2	U	U	3.5	5.5	T35L25	3212	386	190	740	240	17	428	43.5
	3	U	U	3.5	5.5	T35L35	3212	386	190	800	240	17	490	43.5
	4	V	V	4	6	T40M45	3580	443	190	945	360	20	1037	64
	5	V	V	4	6	T40M55	3580	443	190	1005	360	20	1152	64
	6	Z	Z1	4	4	T40N65	3580	513	190	1140	360	20	1332	75.2
1000+1000	2	V	V	4	6	T40M20	3587	443	190	900	360	20	809	64
	3	V	V	4	6	T40M30	3587	443	190	960	360	20	923	64
	4	Z	Z2	4	6	T40N40	3587	513	190	945	360	20	1129	75.2

GBA SERIES JIB CRANES WITH DOUBLE ARM – H VERSION – OVERBRACED VERSION

Column-mounted jib crane
Rotation 260°+260°

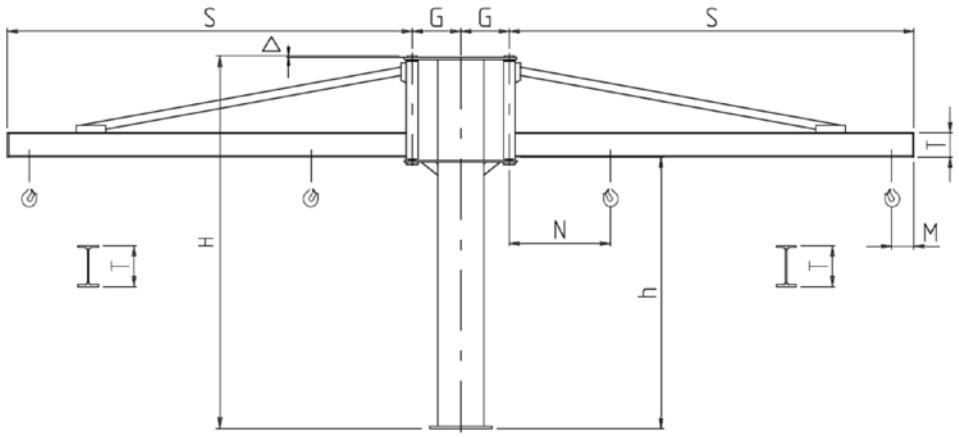

LIFTING CAPACITY (kg)	ARM S m	SIZE OF JIB CRANE		GBA SERIES COLUMN-MOUNTED CRANE - VERSION T											
				HEIGHT H m		TYPE	OVERALL DIMENSIONS (mm)						WEIGHT	
		COLUMN	COUNTERPLATE	BASE	MAX.		UNDER BEAM h	G	M	N	T (IPE)	Δ	JIB CRANE kg	COLUMN BY m kg
	4	T	T	3.5	5.5	H35I40	2738	323	190	780	160	17	350	35
	5	T	T	3.5	5.5	H35I50	2738	323	190	840	160	17	388	35
125+125	6	U	U	3.5	5.5	H35L60	2738	386	190	900	160	17	480	43.5
	7	U	U	3.5	5.5	H35L70	2738	386	190	960	160	17	520	43.5
	8	V	V	4	6	H40M80	2980	443	190	1140	200	20	922	64
	4	U	U	3.5	5.5	H35L40	2738	386	190	780	160	17	405	43.5
	5	U	U	3.5	5.5	H35L50	2738	386	190	840	160	17	442	43.5
250+250	6	V	V	4	6	H40M60	2980	443	190	1020	200	20	800	64
	7	V	V	4	6	H40M70	2980	443	190	1080	200	20	862	64
	8	Z	Z1	4	6	H40N80	2980	513	190	1140	200	20	1013	75.2
	4	V	V	4	6	H40M40	2980	443	190	900	200	20	675	64
	5	V	V	4	6	H40M50	2980	443	190	960	200	20	737	64
500+500	6	Z	Z	4	6	H40N60	2980	513	190	945	200	20	892	75.2
	7	Z	Z1	4	6	H40N70	2980	513	190	1005	200	20	953	75.2
	8	Z	Z2	4	4	H40N85	2980	513	190	1240	240	20	1145	75.2
800+800	6	Z	Z2	4	6	H40N65	2980	513	190	1120	240	20	992	75.2
1000+1000	4	Z	Z2	4	6	H40N40	2980	513	190	900	200	20	767	75.2
	5	Z	Z2	4	6	H40N50	2980	513	190	960	200	20	830	75.2

WALL-MOUNTED JIB CRANES WITH ARTICULATED ARM, WITH FIXED HOIST – MBB SERIES

Wall-mounted jib crane
Rotation 360°

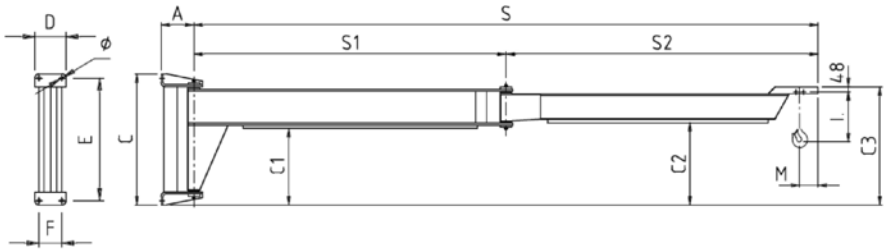

LIFTING CAPACITY (kg)	ARM S m	SIZE OF JIB CRANE	TYPE	WALL-MOUNTED JIB CRANES WITH ARTICULATED ARM, WITH FIXED HOIST - MBB SERIES OVERALL DIMENSIONS (mm)												ADDED HOIST		WEIGHT JIB CRANE kg
				S1	S2	A	C	C1	C2	C3	D	E	F	Ø	M	DMK	HEIGHT I	
125	3	A	A01A3A	1000	2000	225	644	200	373	591	200	594	150	15	180	1	275	114
			A01A3B	1500	1500	225	644	200	373	591	200	594	150	15	180	1	275	138
			A01A3C	2000	1000	225	644	200	373	591	200	594	150	15	180	1	275	160
	4	B	A01B4A	1000	3000	225	644	200	333	591	200	594	150	15	180	1	275	141
			A01B4B	1500	2500	225	644	200	333	591	200	594	150	15	180	1	275	163
			A01B4C	2000	2000	225	644	200	373	591	200	594	150	15	180	1	275	171
	5	B	A01B5A	2000	3000	225	644	200	333	591	200	594	150	15	180	1	275	198
			A01B5B	2500	2500	225	644	200	333	591	200	594	150	15	180	1	275	220
			A01B5C	3000	2000	225	644	200	373	591	200	594	150	15	180	1	275	230
	6	C	A02C6B	2500	3500	280	930	455	592	850	250	870	190	22	180	1	275	326
			A02C6C	3000	3000	280	930	455	592	850	250	870	190	22	180	1	275	361
	7	C	A02C7A	3000	4000	280	930	455	572	850	250	870	190	22	180	1	275	389
			A02C7B	3500	3500	280	930	455	592	850	250	870	190	22	180	1	275	410
250	3	B	A01B3A	1000	2000	225	644	200	333	591	200	594	150	15	180	1-2	275-310	124
			A01B3B	1500	1500	225	644	200	333	591	200	594	150	15	180	1-2	275-310	145
	4	C	A02C4A	1000	3000	280	930	455	552	850	250	870	190	22	180	1-2	275-310	218
			A02C4C	2000	2000	280	930	455	592	850	250	870	190	22	180	1-2	275-310	258
	5	C	A02C5A	2000	3000	280	930	455	552	850	250	870	190	22	180	1-2	275-310	295
			A02C5B	2500	2500	280	930	455	552	850	250	870	190	22	180	1-2	275-310	324
	6	D	A02D6B	2500	3500	280	930	455	552	850	250	870	190	22	180	1-2	275-310	348
			A02D6C	3000	3000	280	930	455	552	850	250	870	190	22	180	1-2	275-310	380
	7	D	A02D7A	3000	4000	280	930	455	552	850	250	870	190	22	180	1-2	275-310	405
			A02D7B	3500	3500	280	930	455	552	850	250	870	190	22	180	1-2	275-310	432
500	3	C	A02C3A	1000	2000	280	930	455	592	850	250	870	190	22	180	2	310	182
			A02C3F	1000	2000	280	930	455	592	850	250	870	190	22	190	3	378	182
			A02C3B	1500	1500	280	930	455	592	850	250	870	190	22	180	2	310	215
			A02C3G	1500	1500	280	930	455	592	850	250	870	190	22	190	3	378	215
	4	D	A02D4A	1000	3000	280	930	455	552	850	250	870	190	22	180	2	310	218
			A02D4F	1000	3000	280	930	455	552	850	250	870	190	22	190	3	378	218
			A02D4C	2000	2000	280	930	455	592	850	250	870	190	22	180	2	310	258
			A02D4H	2000	2000	280	930	455	592	850	250	870	190	22	190	3	378	258
	5	D	A02D5A	2000	3000	280	930	455	552	850	250	870	190	22	180	2	310	295
			A02D5F	2000	3000	280	930	455	552	850	250	870	190	22	190	3	378	295
			A02D5B	2500	2500	280	930	455	552	850	250	870	190	22	180	2	310	324
			A02D5G	2500	2500	280	930	455	552	850	250	870	190	22	190	3	378	324
	6	E	A03E6A	2000	4000	315	1240	725	780	1118	300	1160	220	34	180	2	310	518
			A03E6F	2000	4000	315	1240	725	780	1118	300	1160	220	34	190	3	378	518
			A03E6C	3000	3000	315	1240	725	820	1118	300	1160	220	34	180	2	310	575
			A03E6H	3000	3000	315	1240	725	820	1118	300	1160	220	34	190	3	378	575
	7	E	A03E7A	3000	4000	315	1240	725	780	1118	300	1160	220	34	180	2	310	633
			A03E7F	3000	4000	315	1240	725	780	1118	300	1160	220	34	190	3	378	633
			A03E7B	3500	3500	315	1240	725	780	1118	300	1160	220	34	180	2	310	683
			A03E7G	3500	3500	315	1240	725	780	1118	300	1160	220	34	190	3	378	683

COLUMN-MOUNTED JIB CRANES WITHARTICULATED ARM, WITH FIXED HOIST – CBB SERIES

Column-mounted jib crane
Rotation 360°

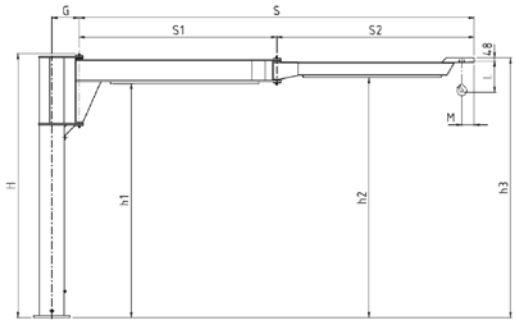

LIFTING CAPACITY (kg)	ARM S m	SIZE OF JIB CRANE	HEIGHT H mm		TYPE	COLUMN-MOUNTED JIB CRANE WITH ARTICULATED ARM, WITH FIXED HOIST - CBB SERIES OVERALL DIMENSIONS (mm)								ADDED HOIST		WEIGHT	
						UNDER BEAM										JIB CRANE kg	COLUMN BY m kg
			BASE	MAX.		h1	h2	h3	S1	S2	G	M	Δ	DMK	HEIGHT I		
125	3	R	3020	5020	A30R3A	2603	2777	2995	1000	2000	228	180	32	1	275	166	18.2
			3020	5020	A30R3B	2603	2777	2995	1500	1500	228	180	32	1	275	190	18.2
			3020	5020	A30R3C	2603	2777	2995	2000	1000	228	180	32	1	275	212	18.2
	4	S	3020	5020	A30S4A	2603	2737	2995	1000	3000	274	180	32	1	275	215	22.8
			3020	5020	A30S4B	2603	2737	2995	1500	2500	274	180	32	1	275	237	22.8
			3020	5020	A30S4C	2603	2777	2995	2000	2000	274	180	32	1	275	245	22.8
	5	S	3020	5020	A30S5A	2603	2737	2995	2000	3000	274	180	32	1	275	272	22.8
			3020	5020	A30S5B	2603	2737	2995	2500	2500	274	180	32	1	275	294	22.8
			3020	5020	A30S5C	2603	2777	2995	3000	2000	274	180	32	1	275	304	22.8
	6	T	3525	5525	A35T6B	3083	3220	3478	2500	3500	323	180	42	1	275	450	35
			3525	5525	A35T6C	3083	3220	3478	3000	3000	323	180	42	1	275	485	35
	7	T	3525	5525	A35T7A	3083	3200	3478	3000	4000	323	180	42	1	275	513	35
			3525	5525	A35T7B	3083	3220	3478	3500	3500	323	180	42	1	275	534	35
250	3	S	3020	5020	A30S3A	2603	2737	2995	1000	2000	274	180	32	1-2	275-310	198	22.8
			3020	5020	A30S3B	2603	2737	2995	1500	1500	274	180	32	1-2	275-310	220	22.8
	4	T	3525	5525	A35T4A	3083	3180	3478	1000	3000	323	180	42	1-2	275-310	342	35
			3525	5525	A35T4C	3083	3220	3478	2000	2000	323	180	42	1-2	275-310	382	35
	5	T	3525	5525	A35T5A	3083	3180	3478	2000	3000	323	180	42	1-2	275-310	419	35
			3525	5525	A35T5B	3083	3180	3478	2500	2500	323	180	42	1-2	275-310	448	35
	6	U	3525	5525	A35U6B	3083	3180	3478	2500	3500	386	180	42	1-2	275-310	520	43.5
			3525	5525	A35U6C	3083	3180	3478	3000	3000	386	180	42	1-2	275-310	552	43.5
	7	U	3525	5525	A35U7A	3083	3180	3478	3000	4000	386	180	42	1-2	275-310	577	43.5
			3525	5525	A35U7B	3083	3180	3478	3500	3500	386	180	42	1-2	275-310	604	43.5
500	3	T	3525	5525	A35T3A	3083	3220	3478	1000	2000	323	180	42	2	310	306	35
			3525	5525	A35T3F	3083	3220	3478	1000	2000	323	190	42	3	378	306	35
			3525	5525	A35T3B	3083	3220	3478	1500	1500	323	180	42	2	310	339	35
			3525	5525	A35T3G	3083	3220	3478	1500	1500	323	190	42	3	378	339	35
	4	U	3525	5525	A35U4A	3083	3180	3478	1000	3000	386	180	42	2	310	390	43.5
			3525	5525	A35U4F	3083	3180	3478	1000	3000	386	190	42	3	378	390	43.5
			3525	5525	A35U4C	3083	3220	3478	2000	2000	386	180	42	2	310	430	43.5
			3525	5525	A35U4H	3083	3220	3478	2000	2000	386	190	42	3	378	430	43.5
	5	U	3525	5525	A35U5A	3083	3180	3478	2000	3000	386	180	42	2	310	467	43.5
			3525	5525	A35U5F	3083	3180	3478	2000	3000	386	190	42	3	378	467	43.5
			3525	5525	A35U5B	3083	3180	3478	2500	2500	386	180	42	2	310	496	43.5
			3525	5525	A35U5G	3083	3180	3478	2500	2500	386	190	42	3	378	496	43.5
	6	V	4025	6025	A40V6A	3565	3620	3958	2000	4000	443	180	45	2	310	796	64
			4025	6025	A40V6F	3565	3620	3958	2000	4000	443	190	45	3	378	796	64
			4025	6025	A40V6C	3565	3660	3958	3000	3000	443	180	45	2	310	853	64
			4025	6025	A40V6H	3565	3660	3958	3000	3000	443	190	45	3	378	853	64
	7	V	4025	6025	A40V7A	3565	3620	3958	3000	4000	443	180	45	2	310	911	64
			4025	6025	A40V7F	3565	3620	3958	3000	4000	443	190	45	3	378	911	64
			4025	6025	A40V7B	3565	3620	3958	3500	3500	443	180	45	2	310	961	64
			4025	6025	A40V7G	3565	3620	3958	3500	3500	443	190	45	3	378	961	64

MBE/CBE SERIES JIB CRANES – H VERSION – MOTORISED ARM OVERBRACED VERSION

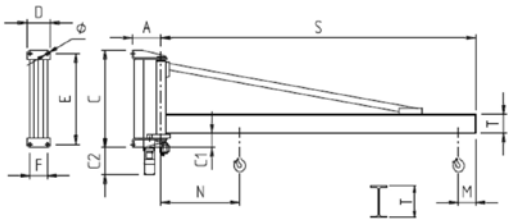

290° Wall-mounted jib crane
Rotation 290°

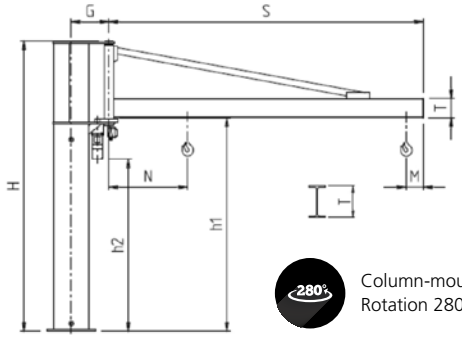

280° Column-mounted jib crane
Rotation 280°

LIFTING CAPACITY (kg)	ARM S m	SIZE OF JIB CRANE	TYPE	MBE SERIES WALL-MOUNTED JIB CRANE - H VERSION - MOTORISED ARM OVERBRACED VERSION												ARM SPEED		MOTOR POWER kW	WEIGHT JIB CRANE kg
				OVERALL DIMENSIONS (mm)												NO. OF REVOLUTIONS R.P.M.	PERIPHERAL m/min		
				A	B	C	C1	C2	D	E	F	Ø	M	N	T (IPE)				
	6	D	EH02D64	340	778	930	152	378	250	870	190	22	190	1080	200	0.6	23	0.4	258
250	7	D	EH02D74	340	778	930	152	378	250	870	190	22	190	1200	*152	0.6	26	0.4	340
	8	E	EH03E84	365	1058	1240	182	348	300	1160	220	34	190	1210	*152	0.6	30	0.4	497
	4	D	EH02D45	340	778	930	152	378	250	870	190	22	190	960	200	1	25	0.4	207
	5	D	EH02D55	340	778	930	152	378	250	870	190	22	190	1020	200	0.8	25	0.4	233
500	6	E	EH03E65	365	1058	1240	182	348	300	1160	220	34	190	1090	200	0.6	23	0.4	334
	7	E	EH03E75	365	1058	1240	182	348	300	1160	220	34	190	1210	*152	0.6	26	0.4	451
	8	F	EH03F85	365	1058	1240	182	348	300	1160	220	34	190	1210	*152	0.6	30	0.4	497
	4	E	EH03E47	365	1058	1240	182	348	300	1160	220	34	190	970	200	1	25	0.4	272
	5	E	EH03E57	365	1058	1240	182	348	300	1160	220	34	190	1030	200	0.8	25	0.4	304
1000	6	F	EH03F67	365	1058	1240	182	348	300	1160	220	34	190	1090	240	0.6	23	0.4	384
	7	F	EH03F77	365	1058	1240	182	348	300	1160	220	34	190	1210	*152	0.6	26	0.4	451
	8	F	EH03F87	365	1058	1240	182	348	300	1160	220	34	190	1210	*152	0.6	30	0.4	497
1600	6	F	EH03F68	365	1058	1240	182	348	300	1160	220	34	210	1170	*152	0.6	23	0.4	420
2000	4	F	EH03F49	365	1058	1240	182	348	300	1160	220	34	210	990	240	0.8	20	0.4	306
	5	F	EH03F59	365	1058	1240	182	348	300	1160	220	34	210	1050	240	0.6	20	0.4	344

* Profiled girder type HEA160

LIFTING CAPACITY (kg)	ARM S m	SIZE OF JIB CRANE	COUNTERPLATE	CBE SERIES COLUMN-MOUNTED JIB CRANE - H VERSION - MOTORISED ARM OVERBRACED VERSION															
				HEIGHT H mm		TYPE	OVERALL DIMENSIONS (mm)							ARM SPEED		MOTOR POWER kW	WEIGHT		
							UNDER BEAM							NO. OF REVOLUTIONS R.P.M.	PERIPHERAL m/min		JIM CRANE kg	COLUMN BY m kg	
				BASE	MAX.		h1	h2	G	M	N	T (IPE)	Δ						
	6	U	U	3.5	5.5	EH35U64	2780	2250	436	190	1080	200	17	0.6	23	0.4	420	43.5	
250	7	U	U	3.5	5.5	EH35U74	2780	2250	436	190	1200	*152	17	0.6	26	0.4	507	43.5	
	8	V	V	4	6	EH40V84	3022	2492	463	190	1210	*152	20	0.6	30	0.4	765	64	
	4	U	U	3.5	5.5	EH35U45	2780	2250	436	190	960	200	17	1	25	0.4	370	43.5	
	5	U	U	3.5	5.5	EH35U55	2780	2250	436	190	1020	200	17	0.8	25	0.4	395	43.5	
500	6	V	V	4	6	EH40V65	3022	2492	463	190	1090	200	20	0.6	23	0.4	600	64	
	7	V	V	4	6	EH40V75	3022	2492	463	190	1210	*152	20	0.6	26	0.4	720	64	
	8	Z	Z1	4	6	EH40Z85	3022	2492	513	190	1210	*152	20	0.6	30	0.4	850	75.2	
	4	V	V	4	6	EH40V47	3022	2492	463	190	970	200	20	1	25	0.4	538	64	
	5	V	V	4	6	EH40V57	3022	2492	463	190	1030	200	20	0.8	25	0.4	570	64	
1000	6	Z	Z1	4	6	EH40Z67	3022	2492	513	190	1090	240	20	0.6	23	0.4	737	75.2	
	7	Z	Z1	4	6	EH40Z77	3022	2492	513	190	1210	*152	20	0.6	26	0.4	805	75.2	
	8	Z	Z2	4	6	EH40Z87	3022	2492	513	190	1210	*152	20	0.6	30	0.4	850	75.2	
1600	6	Z	Z2	4	6	EH40Z68	3022	2492	513	210	1170	*152	20	0.6	23	0.4	767	75.2	
2000	4	Z	Z2	4	6	EH40Z49	3022	2492	513	210	990	240	20	0.8	20	0.4	660	75.2	
	5	Z	Z2	4	6	EH40Z59	3022	2492	513	210	1050	240	20	0.6	20	0.4	697	75.2	

* Profiled girder type HEA160

MBE/CBE SERIES JIB CRANES – T VERSION – MOTORISED ARM CANTILEVER VERSION

Wall-mounted jib crane
Rotation 290°

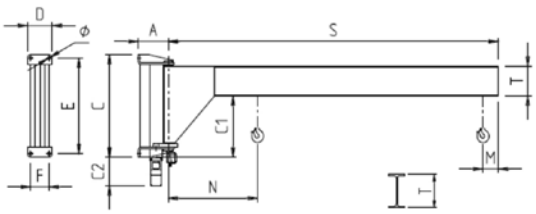

Wall-mounted jib crane
Rotation 290°

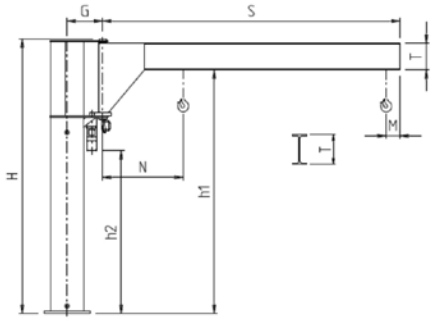

LIFTING CAPACITY (kg)	ARM S m	SIZE OF JIB CRANE	TYPE	MBE SERIES WALL-MOUNTED JIB CRANE - T VERSION - MOTORISED ARM IN CANTILEVER VERSION												ARM SPEED		MOTOR POWER kW	WEIGHT JIB CRANE kg
				OVERALL DIMENSIONS (mm)												NO. OF REVOLUTIONS R.P.M.	PERIPHERAL m/min		
				A	B	C	C1	C2	D	E	F	Ø	M	N	T (IPE)				
500	4	D	ET02D45	340	406	930	524	378	250	870	190	22	190	910	300	1	25	0.4	313
	5	D	ET02D55	340	406	930	524	378	250	870	190	22	190	970	300	0.8	25	0.4	355
	6	E	ET03E65	365	500	1240	740	348	300	1160	220	34	190	1080	360	0.6	23	0.4	574
	7	E	ET03E75	365	540	1240	700	348	300	1160	220	34	190	1270	400	0.6	26	0.4	680
1000	2	D	ET02D27	340	406	930	524	378	250	870	190	22	190	850	300	1.6	20	0.4	229
	3	D	ET02D37	340	406	930	524	378	250	870	190	22	190	910	300	1.2	23	0.4	271
	4	E	ET03E47	365	500	1240	740	348	300	1160	220	34	190	970	360	1	25	0.4	456
	5	E	ET03E57	365	500	1240	740	348	300	1160	220	34	190	1030	360	0.8	25	0.4	514
	6	F	ET03F67	365	500	1240	740	348	300	1160	220	34	190	1080	360	0.6	23	0.4	574
1600	6	F	ET03F68	365	590	1240	650	348	300	1160	220	34	210	1200	450	0.6	23	0.4	714
2000	2	E	ET03E29	365	500	1240	740	348	300	1160	220	34	210	930	360	1.6	20	0.4	341
	3	E	ET03E39	365	500	1240	740	348	300	1160	220	34	210	990	360	1.2	23	0.4	399
	4	F	ET03F49	365	540	1240	700	348	300	1160	220	34	210	1080	400	0.8	20	0.4	508
	5	F	ET03F59	365	590	1240	650	348	300	1160	220	34	210	1130	450	0.6	20	0.4	635

LIFTING CAPACITY (kg)	ARM S m	SIZE OF JIB CRANE	COUNTERPLATE	CBE SERIES COLUMN-MOUNTED JIB CRANE - T VERSION - MOTORISED ARM IN CANTILEVER VERSION															
				HEIGHT H mm		TYPE	OVERALL DIMENSIONS (mm)								ARM SPEED		MOTOR POWER kW	WEIGHT	
							UNDER BEAM												
				BASE	MAX.		h1	h2	G	M	N	T (IPE)	Δ		NO. OF REVOLUTIONS R.P.M.	PERIPHERAL m/min		JIM CRANE kg	COLUMN BY m kg
500	4	U	U	3.5	5.5	ET35U45	3152	2250	436	190	910	300	17		1	25	0.4	476	43.5
	5	U	U	3.5	5.5	ET35U55	3152	2250	436	190	970	300	17		0.8	25	0.4	518	43.5
	6	V	V	4	5	ET40V65	3580	2492	463	190	1080	360	20		0.6	23	0.4	840	64
	6	Z	Z1	4	6	ET40Z65	3580	2492	513	190	1080	360	20		0.6	23	0.4	927	75.2
	7	V	V	4	4	ET40V75	3540	2452	463	190	1270	400	20		0.6	26	0.4	945	64
	7	Z	Z1	4	6	ET40Z75	3540	2452	513	190	1270	400	20		0.6	26	0.4	1032	75.2
1000	2	U	U	3.5	5.5	ET35U27	3152	2250	436	190	850	300	17		1.6	20	0.4	392	43.5
	3	U	U	3.5	5.5	ET35U37	3152	2250	436	190	910	300	17		1.2	23	0.4	434	43.5
	4	V	V	4	6	ET40V47	3580	2492	463	190	970	360	20		1	25	0.4	722	64
	5	V	V	4	6	ET40V57	3580	2492	463	190	1030	360	20		0.8	25	0.4	780	64
	6	Z	Z1	4	6	ET40Z67	3580	2492	513	190	1080	360	20		0.6	23	0.4	927	75.2
2000	2	V	V	4	6	ET40V29	3580	2492	463	210	930	360	20		1.6	20	0.4	607	64
	3	V	V	4	6	ET40V39	3580	2492	463	210	990	360	20		1.2	23	0.4	665	64
	4	Z	Z2	4	6	ET40Z49	3540	2492	513	210	1080	400	20		0.8	20	0.4	832	75.2

GBR SERIES COLUMN-MOUNTED JIB CRANE – ELECTRICALLY ROTATED AT 360° CONTINUOUSLY

Column-mounted jib crane
Rotation 360°

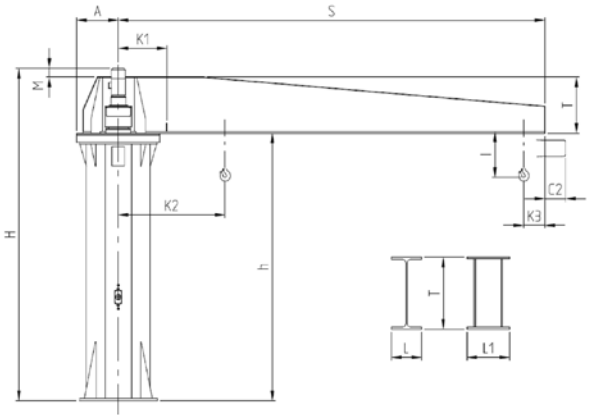

GBR jib cranes with DRH electric wire rope hoist:
K2 = K1+(C+I1-S3)* referring to the fixed mechanical limit switch
K3 = (C+S3)* referring to fixed mechanical limit switch
I* and C2* = (*) See commercial catalogue for DRH hoists

GBR jib cranes with DMK electrical chain hoist:
K2 = K1+(M/2)* referring to fixed mechanical limit switch
K3 = (M/2)* referring to fixed mechanical limit switch
I* = (*) See commercial catalogue for DMK hoists

Total height H* and dimension M* may vary in relation to the motoreducer version

LIFTING CAPACITY (kg)	ARM S m	SIZE OF JIB CRANE	GBR SERIES COLUMN-MOUNTED JIB CRANE - ELECTRICALLY ROTATED AT 360° CONTINUOUSLY															
			TYPE	*UNDER BEAM h	OVERALL DIMENSIONS (mm)							ARM SPEED		MOTOR POWER kW	TILTING MOMENTUM kNm	MAXIMUM PULL OF THE LUG BOLT kN	WEIGHT	
					H*	K1	A	M*	T	L	L1	NO. OF REVOLUTIONS R.P.M.	PERIPHERAL m/min				JIM CRANE kg	COLUMN BY m kg
1000	4	2	2E4040	4000	4663	525	425	335	330	160	–	0.93	23.4	0.25	62	79	1100	122.5
	4.5	2	2E4540	4000	4663	525	425	305	360	170	–	0.93	26.3	0.25	71	79	1140	122.5
	5	2	2E5040	4000	4663	525	425	305	360	170	–	0.93	29.2	0.25	81	79	1170	122.5
	5.5	2	2E5540	4000	4797	525	425	385	400	180	–	0.57	19,7	0.25	90	79	1300	122.5
	6	2	2E6040	4000	4797	525	425	385	400	180	–	0.57	21.5	0.25	102	79	1335	122.5
	6.5	2	2E6540	4000	4797	525	425	220	565	–	300	0.57	23.3	0.25	112	79	1460	122.5
	7	2	2E7040	4000	4797	525	425	220	565	–	300	0.57	25	0.25	125	79	1500	122.5
	7.5	2	2E7540	4000	4797	525	425	220	565	–	300	0.57	27.3	0.25	135	79	1540	122.5
	8	3	3E8040	4000	4862	575	475	233	617	–	300	0.43	26.9	0.25	149	126	1800	141.6
	8.5	3	3E8540	4000	4862	575	475	233	617	–	300	0.43	23	0.25	160	126	1850	141.6
	9	3	3E9040	4000	4862	575	475	227	623	–	300	0.43	24.3	0.25	181	126	2280	141.6
	9.5	3	3E9540	4000	4862	575	475	227	623	–	300	0.43	25.6	0.25	195	126	2360	141.6
	10	3	3E1040	4000	4862	575	475	227	623	–	300	0.43	27	0.25	208	126	2440	141.6
	10.5	3	3E1540	4000	4862	575	475	227	623	–	300	0.43	28.3	0.25	221	126	2520	176.5
2000	4	2	2H4040	4000	4663	525	425	265	400	180	–	0.87	21.9	0.37	109	79	1160	122.5
	4.5	2	2H4540	4000	4797	525	425	335	450	190	–	0.78	22	0.37	126	79	1300	122.5
	5	2	2H5040	4000	4797	525	425	335	450	190	–	0.78	24.5	0.37	142	79	1340	122.5
	5.5	2	2H5540	4000	4797	525	425	220	565	–	300	0.78	27	0.37	161	79	1380	122.5
	6	2	2H6040	4000	4797	525	425	220	565	–	300	0.78	29.4	0.37	179	79	1530	152.6
	6.5	3	3H6540	4000	4862	575	475	227	623	–	300	0.53	21.5	0.37	202	126	1860	141.6
	7	3	3H7040	4000	4862	575	475	227	623	–	300	0.53	23.2	0.37	221	126	2045	176.5
	7.5	3	3H7540	4000	4862	575	475	177	673	–	300	0.53	24.8	0.37	241	126	2130	176.5
	8	3	3H8040	4000	4862	575	475	177	673	–	300	0.53	26.5	0.37	260	126	2185	176.5
	8.5	4	4H8540	4000	4832	588	488	147	673	–	300	0.49	26.4	0.37	282	183	2550	219.7
	9	4	4H9040	4000	4832	588	488	147	673	–	300	0.49	27.9	0.37	303	183	2590	219.7
	9.5	4	4H9540	4000	4832	588	488	97	723	–	300	0.49	29.5	0.37	326	183	2870	273.5
	10	5	5H1040	4000	4832	686	586	97	723	–	300	0.4	25.4	0.37	348	183	2880	183.6
	10.5	5	5H1540	4000	4832	686	586	97	723	–	300	0.4	26.6	0.37	372	183	2925	183.6

* For other standard heights see the table on page 6

LIFTING CAPACITY (kg)	ARM S m	SIZE OF JIB CRANE	GBR SERIES COLUMN-MOUNTED JIB CRANE - ELECTRICALLY ROTATED AT 360° CONTINUOUSLY																
			TYPE	*UNDER BEAM h	OVERALL DIMENSIONS (mm)							ARM SPEED		MOTOR POWER kW	TILTING MOMENTUM kNm	MAXIMUM PULL OF THE LUG BOLT kN	WEIGHT	
					H*	K1	A	M*	T	L	L1	NO. OF REVOLUTIONS R.P.M.	PERIPHERAL m/min				JIM CRANE kg	COLUMN BY m kg
3200	4	2	2J4040	4000	4797	525	425	335	450	190	–	0.93	23.4	0.37	164	79	1380	152.6
	4.5	3	3J4540	4000	4797	575	475	168	617	–	300	0.91	25.7	0.37	191	126	1490	141.6
	5	3	3J5040	4000	4797	575	475	168	617	–	300	0.91	28.6	0.37	215	126	1525	141.6
	5.5	3	3J5540	4000	4862	575	475	227	623	–	300	0.63	21.8	0.37	242	126	1755	141.6
	6	3	3J6040	4000	4862	575	475	227	623	–	300	0.63	23.8	0.37	268	126	1940	176.5
	6.5	4	4J6540	4000	4832	588	488	147	673	–	300	0.59	24.2	0.37	295	183	2330	219.7
	7	4	4J7040	4000	4832	588	488	147	673	–	300	0.49	21.8	0.37	322	183	2585	273.5
	7.5	5	5J7540	4000	4832	686	586	97	723	–	300	0.5	23.8	0.37	353	183	2575	183.6
	8	5	5J8040	4000	4832	686	586	47	773	–	300	0.5	25.4	0.37	381	183	2695	183.6
	8.5	5	5J8540	4000	4832	686	586	44	776	–	300	0.4	21.6	0.37	411	183	2990	229
	9	5	5J9040	4000	4832	686	586	44	776	–	300	0.4	22.8	0.37	440	183	3055	229
	9.5	5	5J9540	4000	4862	686	586	114	826	–	300	0.35	21	0.55	472	183	3235	229
	10	5	5J1040	4000	4862	686	586	114	826	–	300	0.35	22	0.55	502	183	3485	274
	10.5	5	5J1540	4000	4862	686	586	114	826	–	300	0.35	23.2	0.55	535	183	3555	274
4000	4	3	3K4040	4000	4797	575	475	112	673	–	300	0.91	22.9	0.37	208	126	1575	141.6
	4.5	3	3K4540	4000	4797	575	475	112	673	–	300	0.91	25.7	0.37	239	126	1770	176.5
	5	3	3K5040	4000	4797	575	475	112	673	–	300	0.91	28.6	0.37	270	126	1835	176.5
	5.5	4	4K5540	4000	4857	588	488	172	673	–	300	0.64	22.1	0.55	301	183	2415	273.5
	6	4	4K6040	4000	4857	588	488	72	773	–	300	0.64	24.1	0.55	335	183	2525	273.5
	6.5	5	5K6540	4000	4857	686	586	72	773	–	300	0.53	21.6	0.55	367	183	2510	183.6
	7	5	5K7040	4000	4857	686	586	69	776	–	300	0.53	23.3	0.55	402	183	2805	229
	7.5	5	5K7540	4000	4857	686	586	69	776	–	300	0.53	25	0.55	435	183	2860	229
	8	5	5K8040	4000	4857	686	586	19	826	–	300	0.53	26.6	0.55	471	183	2965	229
	8.5	5	5K8540	4000	4938	686	586	114	826	–	300	0.44	23.5	0.55	505	183	3280	274
	9	5	5K9040	4000	4938	686	586	114	826	–	300	0.44	24.9	0.55	540	183	3350	274
	9.5	5	5K9540	4000	4925	700	600	97	830	–	300	0.44	26.2	0.55	578	183	3575	274
	10	5	5K1040	4000	4925	700	600	97	830	–	300	0.35	22.1	0.55	619	183	3655	341.6
	10.5	5	5K1540	4000	4925	700	600	97	830	–	300	0.35	23.2	0.55	648	183	3725	341.6
5000	4	3	3L4040	4000	4797	575	475	112	673	–	300	0.91	22.9	0.37	253	126	1705	176.5
	4.5	4	4L4540	4000	4857	738	488	122	723	–	300	0.77	21.7	0.55	291	183	2105	219.7
	5	4	4L5040	4000	4857	738	488	122	723	–	300	0.77	24.1	0.55	328	183	2150	219.7
	5.5	5	5L5540	4000	4938	836	586	217	723	–	300	0.66	22.7	0.55	365	183	2415	183.6
	6	5	5L6040	4000	4938	836	586	164	776	–	300	0.66	24.8	0.55	405	183	2560	183.6
	6.5	5	5L6540	4000	4938	836	586	114	826	–	300	0.53	21.5	0.55	446	183	2850	229
	7	5	5L7040	4000	4938	836	586	114	826	–	300	0.53	23.1	0.55	485	183	2910	229
	7.5	5	5L7540	4000	4938	836	586	114	826	–	300	0.53	24.8	0.55	525	183	2980	229
	8	5	5L8040	4000	4925	850	600	97	830	–	300	0.53	26.5	0.55	567	183	3360	274
	8.5	5	5L8540	4000	4948	850	600	120	830	–	300	0.36	19.3	0.75	608	183	3715	341.6
	9	5	5L9040	4000	4948	850	600	120	830	–	300	0.36	20.4	0.75	649	183	3785	341.6
	9.5	6	6L9540	4000	4948	923	673	120	830	–	300	0.41	24.4	0.75	691	183	4025	311.5
	10	6	6L1040	4000	4948	923	673	120	830	–	300	0.33	20.6	0.75	733	183	4110	311.5
	10.5	6	6L1540	4000	4948	923	673	120	830	–	300	0.33	21.6	0.75	777	183	4180	311.5
6300	4	4	4M4040	4000	4857	738	488	122	723	–	300	0.96	24.1	0.55	327	183	2050	219.7
	4.5	5	5M4540	4000	4857	836	586	122	723	–	300	0.98	27.7	0.55	376	183	2250	183.6
	5	5	5M5040	4000	4857	836	586	72	773	–	300	0.78	24.6	0.55	425	183	2340	183.6
	5.5	5	5M5540	4000	4961	836	586	192	773	–	300	0.66	22.7	0.75	475	183	2470	183.6
	6	5	5M6040	4000	4961	836	586	189	776	–	300	0.66	24.8	0.75	526	183	2740	229
	6.5	5	5M6540	4000	4948	850	600	176	776	–	300	0.53	21.5	0.75	577	183	3045	274
	7	5	5M7040	4000	4948	850	600	126	826	–	300	0.53	23.1	0.75	630	183	3425	341.6
	7.5	6	6M7540	4000	4948	923	673	126	826	–	300	0.48	22.5	0.75	682	183	3675	311.5
	8	6	6M8040	4000	4948	923	673	122	830	–	300	0.48	24	0.75	736	183	3820	311.5
	8.5	6	6M8540	4000	4948	923	673	122	830	–	300	0.48	25.5	0.75	788	183	3910	311.5
8000	4	5	5N4040	4000	5051	736	586	179	826	–	300	0.88	22.1	1.5	401	183	2365	183.6
	4.5	5	5N4540	4000	5051	736	586	179	826	–	300	0.88	24.9	1.5	461	183	2425	183.6
	5	5	5N5040	4000	5051	736	586	175	830	–	300	0.7	22.1	1.5	522	183	2725	229
	5.5	5	5N5540	4000	5087	750	600	262	830	–	300	0.59	20.4	1.5	583	183	3130	274
	6	5	5N6040	4000	5087	750	600	262	830	–	300	0.59	22.3	1.5	644	183	3470	341.6
	6.5	6	6N6540	4000	5087	823	673	262	830	–	300	0.54	21.9	1.5	705	183	3670	311.5
10000	4	5	5O4040	4000	5083	750	600	262	830	–	300	0.88	22.2	1.5	487	183	2750	229
	4.5	5	5O4540	4000	5083	750	600	262	830	–	300	0.88	25	1.5	560	183	2985	274
	5	5	5O5040	4000	5083	750	600	262	830	–	300	0.74	23.2	1.5	633	183	3060	274
	5.5	6	6O5540	4000	5083	823	673	262	830	–	300	0.67	23.1	1.5	707	183	3540	311.5

GBL SERIES COLUMN-MOUNTED JIB CRANE – ELECTRICALLY/MANUALLY ROTATED AT 360 CONTINUOUSLY

Column-mounted jib crane
Rotation 360°

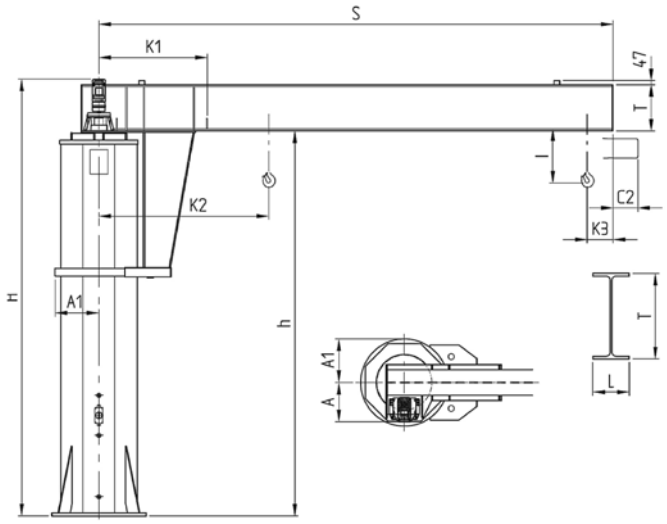

GBL jib cranes with DRH electric wire rope hoist:
K2 = K1+(C+I1-S3)* referring to the fixed mechanical limit switch
K3 = (C+S3)* referring to fixed mechanical limit switch
I and C2 = (*) See commercial catalogue for DRH hoists

GBL jib cranes with DMK electrical chain hoist:
K2 = K1+(M/2)* referring to fixed mechanical limit switch
K3 = (M/2)* referring to fixed mechanical limit switch
I = (*) See commercial catalogue for DMK hoists

LIFTING CAPACITY (kg)	ARM S m	SIZE OF JIB CRANE	GBL SERIES COLUMN-MOUNTED JIB CRANE - ELECTRICALLY ROTATED AT 360° CONTINUOUSLY															
			TYPE	*UNDER BEAM h	OVERALL DIMENSIONS (mm)							ARM SPEED		MOTOR POWER kW	TILTING MOMENTUM kNm	MAXIMUM PULL OF THE LUG BOLT kN	WEIGHT	
					TOTAL HEIGHT H							NO. OF REVOLUTIONS g/m	PERIPHERAL m/min				JIM CRANE kg	COLUMN BY m kg
					ELECTRICALLY	MANUALLY	K1	A	A1	T	L							
	4	2	2E3540	3500	4100	3847	820	550	350	300	150	0,585	14,7	0,4/0,1	63	21	1350	92,7
	5	2	2E3550	3500	4100	3907	820	550	350	360	170	0,585	18,4	0,4/0,1	83	28	1475	92,7
1000	6	2	2E3560	3500	4100	3907	820	550	350	360	170	0,585	22	0,4/0,1	103	34	1535	92,7
	7	2	2E3570	3500	4100	3947	820	550	350	400	180	0,585	25,7	0,4/0,1	125	42	1660	92,7
	8	2	2E3580	3500	4100	3997	820	550	350	450	190	0,585	29,4	0,4/0,1	150	50	1825	92,7
	4	2	2H3540	3500	4100	3907	820	550	350	360	170	0,585	14,7	0,4/0,1	107	36	1420	92,7
	5	2	2H3550	3500	4100	3947	820	550	350	400	180	0,585	18,4	0,4/0,1	139	46	1530	92,7
2000	6	3	3H3560	3500	4100	3997	950	550	400	450	190	0,585	22	0,4/0,1	173	50	1935	141,6
	7	3	3H3570	3500	4100	4047	950	550	400	500	200	0,585	25,7	0,4/0,1	210	61	2113	141,6
	8	3	3H3580	3500	4100	4097	950	550	400	550	210	0,585	29,4	0,4/0,1	250	73	2335	141,6
	4	2	2J3540	3500	4100	-	870	550	350	450	190	0,585	14,7	0,4/0,1	160	53	1515	92,7
3200	5	3	3J3550	3500	4100	-	950	550	400	500	200	0,585	18,4	0,4/0,1	208	60	1930	141,6
	6	3	3J3560	3500	4100	-	950	550	400	550	210	0,585	22	0,4/0,1	258	75	2123	141,6
	7	5	5J4070	4000	4647	-	1265	550	510	600	220	0,585	25,7	0,63/0,15	320	48	3247	183,6
	4	3	3K3540	3500	4100	-	950	550	400	450	190	0,585	14,7	0,4/0,1	198	58	1780	141,6
4000	5	3	3K3550	3500	4100	-	950	550	400	550	210	0,585	18,4	0,4/0,1	258	75	2017	141,6
	6	5	5K4060	4000	4647	-	1265	550	510	600	220	0,585	22	0,63/0,15	327	50	3125	183,6
	7	5	5K4070	4000	4647	-	1265	550	510	600	220	0,585	25,7	0,63/0,15	389	59	3247	183,6
	4	3	3L3540	3500	4100	-	950	550	400	550	210	0,585	14,7	0,4/0,1	243	71	1910	141,6
	5	5	5L4050	4000	4647	-	1265	550	510	600	220	0,585	18,4	0,63/0,15	320	49	3005	183,6
5000	6	5	5L4060	4000	4647	-	1265	550	510	600	220	0,585	22	0,63/0,15	393	60	3125	183,6
	7	5	5L4070	4000	4615	-	1265	550	510	490	300	0,585	25,7	0,63/0,15	474	72	3475	183,6

Attention: manually rotated jib cranes available for capacity up to 2000 Kg

* For other standard heights see the table on page 6

BASE PLATES, FOUNDATION FRAMES AND PLINTHS FOR GBR/GBL SERIES COLUMN-MOUNTED CRANES

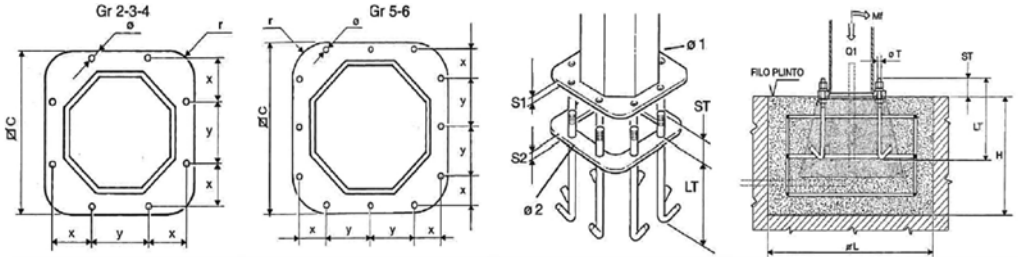

SIZE OF JIB CRANE		2	3	4	5	6
Base plate and foundation frame (mm)	⍁C	750	860	910	1100	1220
	S1	20	25	30	35	40
	S2	10	10	10	10	10
	x	199	230	241	185	215
	y	281	325	341	320	350
	Ø 1	27	33	39	39	39
	Ø 2	25	31	37	37	37
	r	150	170	180	220	240
Anchorage bolts (mm)	ØT	M 24x3	M 30x3.5	M 36x4	M 36x4	M 36x4
	LT	600	700	800	800	800
	ST	90	105	125	130	135
Bolt clamping torque (Nm)		350	680	1200	1200	1200
Weight of frame with lug bolts (kg)		34.5	52.5	80	113	120
Foundation plinth (mm) (see warnings on the previous page)	⍁L	2500	3000	3200	4000	4200
	H	1150	1300	1300	1300	1300
Max jib crane weight (kg) (without hoist and trolley)	Q1	1540/1825	2520/2335	2870	3785/3475	4180
Maximum tilting movement allowed (kNm)	Mf	179/160	270/258	335	649/474	788

COUNTERPLATES FOR FIXING TO THE FLOOR WITH CHEMICAL BOLTS OF THE GBR-GBL SIZE 2-3 COLUMN-MOUNTED CRANES

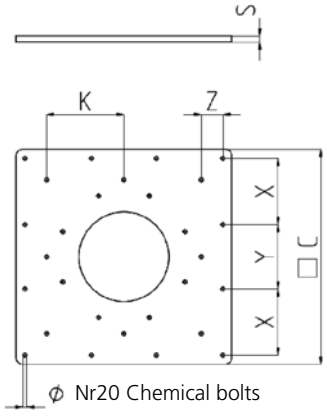

SIZE			2	3
	Counterplate code		GBR250140	GBR350140
	Counterplate dimensions (mm)	⍁C	1200	1400
		X	370	430
		Y	360	440
		Z	120	170
		K	430	480
		S	35	45
		Ø	25	25
	Counterplate weight (kg)		340	600
	Maximum tilting movement allowed (kNm)	Mf*	200	300
Fixing characteristics	Type of concrete of the floor: Minimum Fck/Rck class (N/mm2)		C20/25	C20/25
	Type of chemical bolts (e.g.: HILTI HVU with threaded bars HILTI HAS)		M 20	M20
	Minimum thickness of floor block (mm)		220	220
	Diameter of hole in the floor (mm)		24	24
	Depth of the hole of the concrete in the floor (mm)		170	170
	Clamping torques of the bolts (Nm)		150	150
	Project resistance of traction of one bolt (kN)		74,6	74,6

Fixing of column with chemical bolts, requires a scrupulous verification of suitability in relation to type of support flooring. The suitability checks are the responsibility of the user and must be carried out by expert, qualified technicians who will evaluate the feasibility and formally assume the relative responsibilities.

* For the clamping torques of the bolts between the column and counterplate, see the relative clamping torques for the lug bolts on page 36.

FIXING SYSTEMS FOR JIB CRANES

BRACKET AND STAYBOLTS UNIT FOR GBP/MBB/MBE SERIES WALL-MOUNTED CRANES

SIZE		A	B	C	D	E	F
Reactions (kN)	Q2	2.95	5	9.2	16.85	26.10	28.2
	R	11.9	21.75	27.05	49	66.8	120

TYPE OF BRACKET			01	02	03
Ø Staybolts/screws			M16	M20	M30
Clamping torques (Nm)	Staybolts		128	250	857
	Screws		205	400	1370
Bracket Type: Short (mm)	Code		GBK010110	GBP020110	GBP030110
	U		50	60	80
	V		420	490	532
	Z		75	90	135
	Weight (kg)		21	36	75
Pillar dimensions (mm)	x	min	200	250	300
		max	330	400	400
	y	max	850	810	750
Bracket Type: Medium (mm)	Code		GBK010120	GBP020120	GBP030120
	U		50	80	100
	V		550	640	682
	Z		75	120	145
	Weight (kg)		26	60	96

TYPE OF BRACKET			01	02	03
Ø Staybolts/screws			M16	M20	M30
Pillar dimensions (mm)	x	min	200	250	400
		max	460	550	550
	y	max	850	770	710
Bracket Type: Long (mm)	Code		GBK010130	GBP020130	GBP030130
	U		60	80	120
	V		740	840	882
	Z		85	120	155
	Weight (kg)		40	74	132
Pillar dimensions (mm)	x	min	460	550	550
		max	650	750	750
	y	max	830	770	670

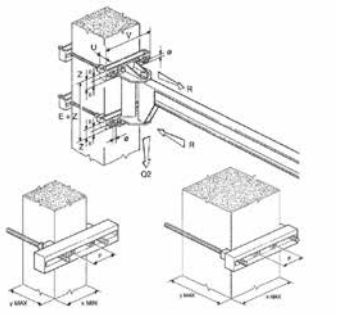

N.B.: The bracket and staybolts unit, used in the wall-mounted version for fixing the bracket to a pillar, is available on request.

BASE PLATES, FOUNDATION FRAMES AND PLINTHS FOR GBA/CBB/CBE SERIES COLUMN-MOUNTED CRANES

SIZE		R	S	T	U	V	Z
Code foundation set		GBK1R0260	GBK1S0260	GBK1T0260	GBK1U0260	GBK1V0260	GBK1Z0260
Base plate and foundation frame (mm)	⍁C	205	258	296	372	435	515
	⍁P	275	340	380	475	555	660
	S1	15	15	15	20	20	25
	S2	8	8	8	8	8	8
	x	247	305	345	432	506	599
	y	103	126	143	179	210	248
	Ø	268	330	373	468	548	648
	r	88	104	116	145	165	197
	Ø1	16	20	20	25	29	35
	Ø2	13	17	17	21	25	31
Lug bolts (mm)	ØT	M12	M16	M16	M20	M24	M30
	LT	400	450	450	550	600	700
	ST	40	45	45	55	60	75
Clamping torques (Nm)		45	105	105	200	350	680
Frame/bolt weight (kg)		8	13	14	23	35	61
Foundation plinth (mm)	⍁L	1200	1300	1400	1700	2000	2400
	H	800	800	900	900	1100	1100
Reaction (kN)	Q1	3.3	5.7	10.15	18.4	28.7	29.35
Momentum (kNm)	MF	12	21	31	57	107	164

The dimensions of the plinths are purely indicative!
The plinth must be dimensioned by expert, qualified technicians considering the real consistency of the ground and the maximum pressure it can withstand.

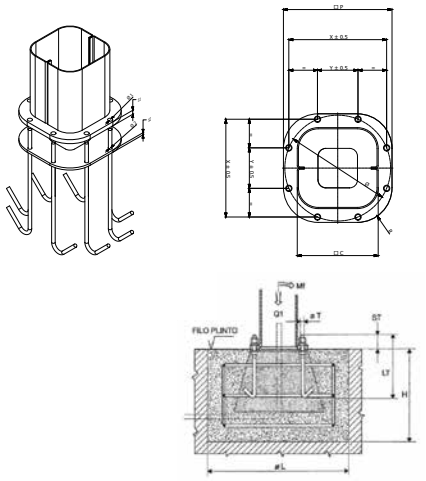

N.B.: The foundation frames with lug bolts, used in the column-mounted version for fixing the column itself to the foundation plinth is supplied on request.
* M= 1,11; ψ= 1,15

COUNTERPLATES FOR FIXING TO THE FLOOR WITH CHEMICAL BOLTS OF THE GBA/CBB/CBE COLUMN-MOUNTED CRANES

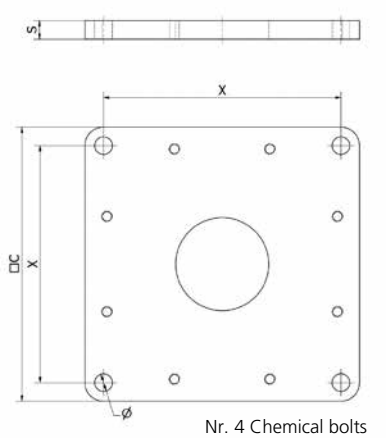

Nr. 4 Chemical bolts

COUNTERPLATES R - S

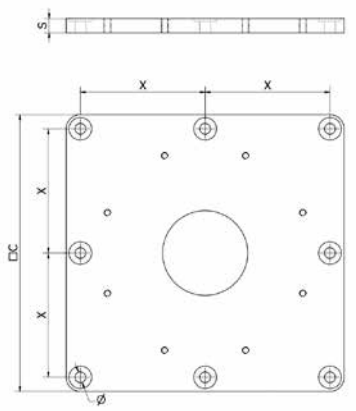

Nr. 8 Chemical bolts

COUNTERPLATES T

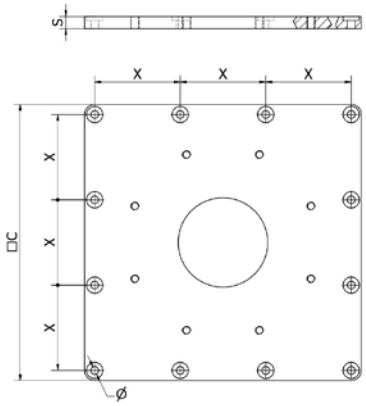

Nr. 12 Chemical bolts

COUNTERPLATES U - V - Z1

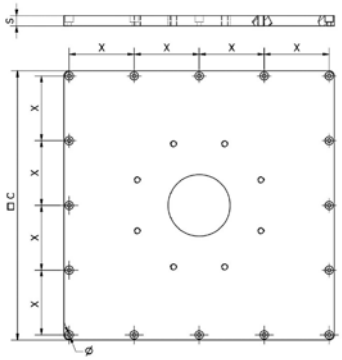

Nr. 16 Chemical bolts

COUNTERPLATES Z2

The fixing of the column using chemical bolts, needs a scrupulous check of suitability in relation to the type of support flooring.The suitability checks are the responsibility of the user and must be carried out by expert, qualified technicians who will evaluate the feasibility and formally undertake the relative responsibilities.

SIZE			R	S	T	U	V	Z1	Z2
	Counter plate and chemical bolts code		GBA2R0KPS	GBA2S0KPS	GBA2T0KPS	GBA2U0KPS	GBA2V0KPS	GBA2Z1KPS	GBA2Z2KPS
	Counterplate dimensions (mm)	⍁ C	295	445	490	680	995	1130	1310
		S	20	20	25	30	40	40	50
		x	255	395	220	210	315	360	315
		Nr x Ø	4x19	4x19	8x19	12x19	12x19	12x19	16x19
	Counterplate weight (kg)		15	30	45	100	285	375	640
	Maximum tilting movement allowed (kNm)	Mf*	11,8	20,7	31,2	56,7	107,3	135,6	164
Fixing characteristics	Type of concrete of the floor: Class Fck/Rck minimum (N/mm2)		C20/25	C20/25	C20/25	C20/25	C20/25	C20/25	C20/25
	Minimum floor thickness (mm)		170	170	170	170	170	170	170
	Diameter of hole in the floor (mm)		18	18	18	18	18	18	18
	Depth of the hole in floor's concrete (mm)		135	135	135	135	135	135	135
	Clamping torque of the bolts (Nm)		60	60	60	60	60	60	60
	Dowel height from top plate surface (mm)		45	45	40	35	25	25	15

* For the clamping torques of the bolts between the column and counterplate, see the relative clamping torques for the lug bolts on page 36.

REGULATIONS COMPLIANCE

REGULATORY REFERENCE FRAMEWORK

In the designing and construction of the manually and electrically rotated, column and wall-mounted jib cranes, the following standards and main technical rules have been taken into consideration:

- EN ISO 12100:2010 "General principles for design"
- EN ISO 13849-1:2008 "Safety-related parts of control systems (where required)"
- EN 12077-2:2008 "Limiting and indicating devices"
- EN 60204-32:2009 "Safety of machinery. Electrical equipment of machines. Requirements for hoisting machines"
- EN 60529:1997 "Degrees of protection provided by enclosures (IP Code)"
- ISO 4301-1:1988 "Cranes and lifting appliances Classification"
- FEM 1.001/98 "Rules for the design of hoisting appliances"

LEGISLATIVE REFERENCE FRAMEWORK

The manually or electrically rotated column and wall-mounted jib cranes are designed and produced in consideration of the "Essential Safety Requirements" of Annex I of Machinery Directive 2006/42/EC and are put on the market with the CE mark and CE Declaration of Conformity - Annex II A.

In addition the jib cranes are in compliance with the following directives:

- **LOW VOLTAGE DIRECTIVE 2014/35/UE**
- **ELECTROMAGNETIC COMPATIBILITY DIRECTIVE 2014/30/UE**



DONATI WEBSITE



Donati's window on the world for customer service.

Manuals and product information
The new Donati website has been designed to assist customers to they can easily find all of the updated information on Donati products at any time.
The Donati website makes it simple to consult and download product catalogues, technical manuals and product information sheets.

Donati Shop
The Donati Shop makes it possible to quickly and independently handle spare parts requests, thus reducing waiting times for customers.

Contact Section
The new contact section divided by departments lets you address your requests to the right team, so our staff can provide a faster and more accurate answer.

LEONARDO CONFIGURATION SYSTEM



Leonardo Configuration System is the Donati configurator system lets you configure and generate offers for Chain hoists, Jib cranes and Crane sets, easily and quickly; it lets you rapidly and efficiently respond to your customers' requests.

The suite is composed of two configurators:

Leonardo Product Configurator:
Used to configure chain hoists and jib cranes alone or in combination

Leonardo Crane Set Configurator:
Used to configure bridge cranes complete with all necessary accessories and Donati hoists.

donati

CLEVER CONVENIENCE

visit donaticranes.com
and keep up to date

MKCT20ENB1

Donati Sollevamenti S.r.l.
Via Archimede, 45/47
20864 Agrate Brianza (MB) - Italy
Tel +39 0331 14811
Fax +39 0331 1481880

dvo.info@donaticranes.com
www.donaticranes.com

The images shown are the property of Donati Sollevamenti Srl, therefore it is prohibited to reproduce, divulge or use them without explicit permission. Donati Sollevamenti Srl shall not be held liable for any printing errors or inaccuracies and reserves the right to change, update or modify the information contained herein at any time and with no advance notice.